Test Report issued under the responsibility of:

Prodigy Technology Consultant Co., Ltd.

TEST REPORT

EN 60950-1

Information technology equipment – Safety – Part 1: General requirements

Report Number. ..... :	I150511-02-A0
Date of issue ..... :	2015-06-25
Total number of pages.....	45
Applicant's name..... :	VIVOTEK INC.
Address ..... :	6F, No.192, Lien-Cheng Rd., Chung-Ho , New Taipei City, 235, Taiwan
Test specification:	
Standard ..... :	EN 60950-1:2006+A11:2009+A1:2010+A12:2011+A2:2013
Test procedure..... :	CE Marking serial in LVD
Non-standard test method..... :	None
Test Report Form No..... :	DTL-089-A6
Test Report Form(s) Originator.... :	Prodigy Technology Consultant Co., Ltd.
Master TRF ..... :	Dated 2014-02-10

Test item description .....:	Stereo Camera
Trade Mark .....:	VIVOTEK
Manufacturer.....:	VIVOTEK INC. 5F, No.168, Lien-Cheng Rd., Chung-Ho , New Taipei City, 235, Taiwan
Model/Type reference .....:	SC8131
Ratings .....:	(Optional) 36-57Vdc, 0.36-0.23A

Testing procedure and testing location:			
☒	**Testing Laboratory:**		
Testing location/ address ..... :		Prodigy Technology Consultant Co., Ltd. / No.181, Sec. 2, Wunhua 1st Rd., Linkou District, New Taipei City 244, Taiwan CHINESE TAIPEI	
☐	**Associated Testing Laboratory:**		
Testing location/ address ..... :			
Tested by (name + signature)..... :		Frank Chang	
Approved by (name + signature) ..... :		Yama Cheng	

List of Attachments (including a total number of pages in each attachment):

National Differences (21 pages)
Enclosures (30 pages)

Summary of testing:

Unless otherwise indicated, all tests were conducted at Prodigy Technology Consultant Co., Ltd. No.181, Sec. 2, Wunhua 1st Rd., Linkou District, New Taipei City 244, Taiwan CHINESE TAIPEI

Tests performed (name of test and test clause):	**Testing location:**
Input Test: Single-Phase (1.6.2) SELV Reliability Test Including Hazardous Voltage Measurement (2.2.2, 2.2.3, 2.2.4, PART 22 6.1) Limited Power Source Measurements (2.5) Steady Force (4.2.1 - 4.2.4) Impact Test (4.2.5, 4.2.1, PART 22 10.2) Loading Tests – Wall And Ceiling Mounted Equipment (4.2.10) Heating Testing (4.5.1, 1.4.12, 1.4.13) Component Failure Test (5.3.1, 5.3.4, 5.3.7)	Prodigy Technology Consultant Co., Ltd. / No.181, Sec. 2, Wunhua 1st Rd., Linkou District, New Taipei City 244, Taiwan CHINESE TAIPEI

Summary of compliance with National Differences

List of countries addressed:
Group (EU)

☒ The product fulfils the requirements of **IEC 60950-1:2005 + Am 1:2009 + Am 2:2013**

Copy of marking plate

The artwork below may be only a draft (See Enclosure/Marking Plate ID 13-01 for detail). The use of certification marks on a product must be authorized by the respective NCBs that own these marks.

(Additional requirements for markings. See 1.7 NOTE)

Test item particulars..... :	
Equipment mobility.....:	[] movable [] hand-held [] transportable [X] stationary[] for building-in [] direct plug-in
Connection to the mains.....:	[] pluggable equipment [] type A [] type B [] permanent connection [] detachable power supply cord [] non-detachable power supply cord [X] not directly connected to the mains
Operating condition.....:	[X] continuous [] rated operating / resting time:
Access location .....:	[X] operator accessible [] restricted access location
Over voltage category (OVC) .....:	[X] OVC I [] OVC II [] OVC III [] OVC IV [] other:
Mains supply tolerance (%) or absolute mains supply values .....:	No direct connection
Tested for IT power systems .....:	[] Yes [X] No
IT testing, phase-phase voltage (V) .....:	N/A
Class of equipment .....:	[] Class I [] Class II [X] Class III [] Not classified
Considered current rating of protective device as part of the building installation (A) .....:	N/A
Pollution degree (PD) .....:	[] PD 1 [X] PD 2 [] PD 3
IP protection class .....:	IPX0
Altitude during operation (m) .....:	up to 2000 m
Altitude of test laboratory (m) .....:	up to 2000 m
Mass of equipment (kg) .....:	0.40kg max. (sample only) 0.07kg (Mounting means only)

Possible test case verdicts:	
- test case does not apply to the test object.....:	N/A
- test object does meet the requirement.....:	P (Pass)
- test object does not meet the requirement.....:	F (Fail)
Testing.....:	
Date of receipt of test item .....:	2015-05-11
Date (s) of performance of tests .....:	2015-05-22 to 2015-06-02

General remarks:
"(See Enclosure #)" refers to additional information appended to the report. "(See appended table)" refers to a table appended to the report. **Throughout this report a ☐ comma / ☒ point is used as the decimal separator.**
When differences exist; they shall be identified in the General product information section.
Name and address of factory ~~(ies)~~ ..... : VIVOTEK INC. 5F, No.168, Lien-Cheng Rd., Chung-Ho , New Taipei City, 235, Taiwan

GENERAL PRODUCT INFORMATION:

Report Summary

All applicable tests according to the referenced standard(s) have been carried out.

Product Description

- The equipment is a Class III Camera, consists of electronic components mounted on PWB and is equipped with a progressive scan CMOS sensor then housed within metal/plastic enclosure, also provides RJ45, and Terminal block, which is used to connect external input/output devices.
- The EUT intended installs to the wall or ceiling.

Model Differences

N/A

Additional Information

- The label is a draft of an artwork for marking plate pending approval by National Certification Bodies and it shall not be affixed to products prior to such an approval.
- Additional investigation in accordance with IEC 60950-1:2005 +A1:2009+ A2:2013.
- The product was submitted and evaluated for use at the maximum ambient temperature (Tma) permitted by the manufacturer's specification of: 40 °C
- The following circuit locations (with circuit/schematic designation) were investigated as a limited power source (LPS): All output ports
- The following are available from the Applicant upon request: Installation (Safety) Instructions / Manual

Abbreviations used in the report:

- normal conditions	N.C.	- single fault conditions	S.F.C
- functional insulation	OP	- basic insulation	BI
- double insulation	DI	- supplementary insulation	SI
- between parts of opposite polarity	BOP	- reinforced insulation	RI

Indicate used abbreviations (if any)

EN 60950-1			
Clause	Requirement + Test	Result - Remark	Verdict

1	**GENERAL**		Pass

1.5	**Components**		Pass
1.5.1	General	See below.	Pass
	Comply with IEC 60950-1 or relevant component standard	(see appended tables 1.5.1)	Pass
1.5.2	Evaluation and testing of components	- Components certified to IEC harmonized standard and checked for correct application. - Components, for which no relevant IEC-Standard exist, have been tested under the conditions occurring in the equipment, using applicable parts of IEC 60950-1. - Components not certified are used in accordance with their ratings and they comply with applicable parts of IEC 60950-1 and the relevant component Standard.	Pass
1.5.3	Thermal controls	No thermal controls used.	N/A
1.5.4	Transformers	Class III equipment	N/A
1.5.5	Interconnecting cables	Interconnecting cables comply with the relevant requirements of this standard.	Pass
1.5.6	Capacitors bridging insulation	Class III equipment.	N/A
1.5.7	Resistors bridging insulation		N/A
1.5.7.1	Resistors bridging functional, basic or supplementary insulation		N/A
1.5.7.2	Resistors bridging double or reinforced insulation between a.c. mains and other circuits		N/A
1.5.7.3	Resistors bridging double or reinforced insulation between a.c. mains and antenna or coaxial cable		N/A
1.5.8	Components in equipment for IT power systems		N/A
1.5.9	Surge suppressors		N/A
1.5.9.1	General		N/A
1.5.9.2	Protection of VDRs		N/A

EN 60950-1			
Clause	Requirement + Test	Result - Remark	Verdict
1.5.9.3	Bridging of functional insulation by a VDR		N/A
1.5.9.4	Bridging of basic insulation by a VDR		N/A
1.5.9.5	Bridging of supplementary, double or reinforced insulation by a VDR		N/A
1.6	**Power interface**		Pass
1.6.1	AC power distribution systems	Class III equipment.	N/A
1.6.2	Input current	The steady state input current of the equipment did not exceed the RATED CURRENT by more than 10% under NORMAL LOAD. (see appended table 1.6.2)	Pass
1.6.3	Voltage limit of hand-held equipment		N/A
1.6.4	Neutral conductor	Class III equipment.	N/A
1.7	**Marking and instructions**		Pass
1.7.1	Power rating and identification markings	Rating marking readily visible to operator. (Optional)	Pass
1.7.1.1	Power rating marking		Pass
	Multiple mains supply connections.....:		N/A
	Rated voltage(s) or voltage range(s) (V) .....:	(Optional) 36-57Vdc	Pass
	Symbol for nature of supply, for d.c. only.....:	⎓ (60417-2-IEC-5031)	Pass
	Rated frequency or rated frequency range (Hz) ...:		N/A
	Rated current (mA or A) .....:	(Optional) 0.36-0.23A	Pass
1.7.1.2	Identification markings	See below	Pass
	Manufacturer's name or trade-mark or identification mark .....:	Manufacturer: VIVOTEK INC or Trademark: VIVOTEK	Pass
	Model identification or type reference .....:	SC8131	Pass
	Symbol for Class II equipment only .....:	Class III equipment.	N/A
	Other markings and symbols .....:	Additional symbol may be provided when submitted for national approval.	N/A
1.7.1.3	Use of graphical symbols		N/A

EN 60950-1			
Clause	Requirement + Test	Result - Remark	Verdict
1.7.2	Safety instructions and marking	- Safety instructions in English. Other languages will be provided when submitted for national approval. - The instructions may be forming by a hard copy format, website or CD-ROM.	Pass
1.7.2.1	General		Pass
1.7.2.2	Disconnect devices		N/A
1.7.2.3	Overcurrent protective device		N/A
1.7.2.4	IT power distribution systems	Class III equipment.	N/A
1.7.2.5	Operator access with a tool		N/A
1.2.7.6	Ozone		N/A
1.7.3	Short duty cycles		N/A
1.7.4	Supply voltage adjustment .....:		N/A
	Methods and means of adjustment; reference to installation instructions .....:		N/A
1.7.5	Power outlets on the equipment .....:	12Vdc, 0.05A	Pass
1.7.6	Fuse identification (marking, special fusing characteristics, cross-reference) .....:		N/A
1.7.7	Wiring terminals	See below.	N/A
1.7.7.1	Protective earthing and bonding terminals .....:	Class III equipment.	N/A
1.7.7.2	Terminals for a.c. mains supply conductors	Not permanently connected equipment	N/A
1.7.7.3	Terminals for d.c. mains supply conductors	Not permanently connected equipment	N/A
1.7.8	Controls and indicators	No indicators, switches and other controls affecting safety provided.	Pass
1.7.8.1	Identification, location and marking .....:		N/A
1.7.8.2	Colours .....:		N/A
1.7.8.3	Symbols according to IEC 60417.....:		N/A
1.7.8.4	Markings using figures .....:		N/A
1.7.9	Isolation of multiple power sources .....:		N/A
1.7.10	Thermostats and other regulating devices .....:	No thermostats or similar regulating devices.	N/A

EN 60950-1			
Clause	Requirement + Test	Result - Remark	Verdict
1.7.11	Durability	Comply with the durability test	Pass
1.7.12	Removable parts	No marking is located on a removable parts.	Pass
1.7.13	Replaceable batteries ..... :		N/A
	Language(s) ..... :		—
1.7.14	Equipment for restricted access locations ..... :	Equipment not intended for installation in a RESTRICTED ACCESS LOCATION.	N/A
2	**PROTECTION FROM HAZARDS**		Pass
2.1	Protection from electric shock and energy hazards		Pass
2.1.1	Protection in operator access areas	Supplied by SELV, and no hazardous voltage generated within unit.	Pass
2.1.1.1	Access to energized parts		Pass
	Test by inspection ..... :	All accessible circuits are SELV circuits	Pass
	Test with test finger (Figure 2A) ..... :		N/A
	Test with test pin (Figure 2B) ..... :		N/A
	Test with test probe (Figure 2C) ..... :	No TNV present.	N/A
2.1.1.2	Battery compartments		N/A
2.1.1.3	Access to ELV wiring	No ELV wiring in operator accessible area.	N/A
	Working voltage (Vpeak or Vrms); minimum distance through insulation (mm)		—
2.1.1.4	Access to hazardous voltage circuit wiring	No internal wiring accessible to the user.	N/A
2.1.1.5	Energy hazards ..... :	No hazardous energy in operator access area.	Pass
2.1.1.6	Manual controls	No shafts or knobs, etc. at ELV, TNV or hazardous voltage.	N/A
2.1.1.7	Discharge of capacitors in equipment	Class III equipment.	N/A
	Measured voltage (V); time-constant (s)..... :		—
2.1.1.8	Energy hazards – d.c. mains supply		N/A
	a) Capacitor connected to the d.c. mains supply .. :		N/A

EN 60950-1			
Clause	Requirement + Test	Result - Remark	Verdict
	b) Internal battery connected to the d.c. mains supply ..... :		N/A
2.1.1.9	Audio amplifiers ..... :		N/A
2.1.2	Protection in service access areas		N/A
2.1.3	Protection in restricted access locations		N/A
2.2	**SELV circuits**		Pass
2.2.1	General requirements	The unit intended to be supplied by SELV.	Pass
2.2.2	Voltages under normal conditions (V) ..... :	All accessible voltage are less than 42.4Vp or 60Vdc and are classified as SELV.	Pass
2.2.3	Voltages under fault conditions (V) ..... :	Under fault conditions voltages never exceed 71 Vpeak and 120 Vdc and do not exceed 42.4 V peak or 60 V dc for more than 0.2 sec.	Pass
2.2.4	Connection of SELV circuits to other circuits ..... :	SELV circuits are only connected to other SELV circuit.	Pass
2.3	**TNV circuits**		N/A
2.3.1	Limits	No TNV Circuit	N/A
	Type of TNV circuits..... :		—
2.3.2	Separation from other circuits and from accessible parts		N/A
2.3.2.1	General requirements		N/A
2.3.2.2	Protection by basic insulation		N/A
2.3.2.3	Protection by earthing		N/A
2.3.2.4	Protection by other constructions ..... :		N/A
2.3.3	Separation from hazardous voltages		N/A
	Insulation employed ..... :		—
2.3.4	Connection of TNV circuits to other circuits		N/A
	Insulation employed ..... :		—
2.3.5	Test for operating voltages generated externally		N/A

EN 60950-1			
Clause	Requirement + Test	Result - Remark	Verdict

2.4	**Limited current circuits**		N/A
2.4.1	General requirements		N/A
2.4.2	Limit values		N/A
	Frequency (Hz) .....:		—
	Measured current (mA).....:		—
	Measured voltage (V).....:		—
	Measured circuit capacitance (nF or µF).....:		—
2.4.3	Connection of limited current circuits to other circuits		N/A

2.5	**Limited power sources**		Pass
	a) Inherently limited output	See appended table 2.5 for details.	Pass
	b) Impedance limited output		N/A
	c) Regulating network or IC current limiter, limits output under normal operating and single fault condition	See appended table 2.5 for details.	Pass
	Use of integrated circuit (IC) current limiters		N/A
	d) Overcurrent protective device limited output		N/A
	Max. output voltage (V), max. output current (A), max. apparent power (VA).....:	(see appended table 2.5)	—
	Current rating of overcurrent protective device (A) .:		—

2.6	**Provisions for earthing and bonding**		N/A
2.6.1	Protective earthing	Class III equipment.	N/A
2.6.2	Functional earthing		N/A
	Use of symbol for functional earthing .....:		N/A
2.6.3	Protective earthing and protective bonding conductors		N/A
2.6.3.1	General		N/A
2.6.3.2	Size of protective earthing conductors		N/A
	Rated current (A), cross-sectional area (mm^2), AWG.....:		—
2.6.3.3	Size of protective bonding conductors		N/A

EN 60950-1			
Clause	Requirement + Test	Result - Remark	Verdict
	Rated current (A), cross-sectional area (mm^2), AWG.....:		—
	Protective current rating (A), cross-sectional area (mm^2), AWG.....:		—
2.6.3.4	Resistance of earthing conductors and their terminations; resistance (Ω), voltage drop (V), test current (A), duration (min).....:		N/A
2.6.3.5	Colour of insulation .....:		N/A
2.6.4	Terminals		N/A
2.6.4.1	General		N/A
2.6.4.2	Protective earthing and bonding terminals		N/A
	Rated current (A), type, nominal thread diameter (mm).....:		—
2.6.4.3	Separation of the protective earthing conductor from protective bonding conductors		N/A
2.6.5	Integrity of protective earthing		N/A
2.6.5.1	Interconnection of equipment		N/A
2.6.5.2	Components in protective earthing conductors and protective bonding conductors		N/A
2.6.5.3	Disconnection of protective earth		N/A
2.6.5.4	Parts that can be removed by an operator		N/A
2.6.5.5	Parts removed during servicing		N/A
2.6.5.6	Corrosion resistance		N/A
2.6.5.7	Screws for protective bonding		N/A
2.6.5.8	Reliance on telecommunication network or cable distribution system		N/A

2.7	**Overcurrent and earth fault protection in primary circuits**		N/A
2.7.1	Basic requirements	Class III equipment.	N/A
	Instructions when protection relies on building installation		N/A
2.7.2	Faults not simulated in 5.3.7		N/A
2.7.3	Short-circuit backup protection		N/A
2.7.4	Number and location of protective devices .....:		N/A
2.7.5	Protection by several devices		N/A

EN 60950-1			
Clause	Requirement + Test	Result - Remark	Verdict
2.7.6	Warning to service personnel .....:		N/A
2.8	**Safety interlocks**		N/A
2.8.1	General principles	No safety interlocks provided.	N/A
2.8.2	Protection requirements		N/A
2.8.3	Inadvertent reactivation		N/A
2.8.4	Fail-safe operation		N/A
	Protection against extreme hazard		N/A
2.8.5	Moving parts		N/A
2.8.6	Overriding		N/A
2.8.7	Switches, relays and their related circuits		N/A
2.8.7.1	Separation distances for contact gaps and their related circuits (mm) .....:		N/A
2.8.7.2	Overload test		N/A
2.8.7.3	Endurance test		N/A
2.8.7.4	Electric strength test		N/A
2.8.8	Mechanical actuators		N/A
2.9	**Electrical insulation**		Pass
2.9.1	Properties of insulating materials	Class III equipment.	N/A
2.9.2	Humidity conditioning		N/A
	Relative humidity (%), temperature (°C) .....:		—
2.9.3	Grade of insulation	Function Insulation provided.	Pass
2.9.4	Separation from hazardous voltages		N/A
	Method(s) used .....:		—
2.10	**Clearances, creepage distances and distances through insulation**		Pass
2.10.1	General	See below.	Pass
2.10.1.1	Frequency .....:		N/A
2.10.1.2	Pollution degrees .....:	Pollution degree 2 applicable.	Pass
2.10.1.3	Reduced values for functional insulation		N/A
2.10.1.4	Intervening unconnected conductive parts		N/A

EN 60950-1			
Clause	Requirement + Test	Result - Remark	Verdict
2.10.1.5	Insulation with varying dimensions		N/A
2.10.1.6	Special separation requirements		N/A
2.10.1.7	Insulation in circuits generating starting pulses	Class III equipment.	N/A
2.10.2	Determination of working voltage		N/A
2.10.2.1	General		N/A
2.10.2.2	RMS working voltage		N/A
2.10.2.3	Peak working voltage		N/A
2.10.3	Clearances	Class III product – secondary circuits comply with Sub clause 5.3.4. Function insulation. (See appended table 2.10.3 and 2.10.4).	Pass
2.10.3.1	General		Pass
2.10.3.2	Mains transient voltages		N/A
	a) AC mains supply ..... :		N/A
	b) Earthed d.c. mains supplies ..... :		N/A
	c) Unearthed d.c. mains supplies ..... :		N/A
	d) Battery operation ..... :		N/A
2.10.3.3	Clearances in primary circuits	Class III equipment.	N/A
2.10.3.4	Clearances in secondary circuits	Functional insulation	Pass
2.10.3.5	Clearances in circuits having starting pulses		N/A
2.10.3.6	Transients from a.c. mains supply ..... :		N/A
2.10.3.7	Transients from d.c. mains supply ..... :		N/A
2.10.3.8	Transients from telecommunication networks and cable distribution systems ..... :		N/A
2.10.3.9	Measurement of transient voltage levels		N/A
	a) Transients from a mains supply		N/A
	For an a.c. mains supply ..... :		N/A
	For a d.c. mains supply ..... :		N/A
	b) Transients from a telecommunication network :		N/A
2.10.4	Creepage distances		Pass
2.10.4.1	General		Pass
2.10.4.2	Material group and comparative tracking index		Pass

EN 60950-1			
Clause	Requirement + Test	Result - Remark	Verdict
	CTI tests ..... :	Material group IIIb is assumed to be used 100≤CTI<175	—
2.10.4.3	Minimum creepage distances	Functional insulation for secondary circuit	Pass
2.10.5	**Solid insulation**		N/A
2.10.5.1	General		N/A
2.10.5.2	Distances through insulation		N/A
2.10.5.3	Insulating compound as solid insulation		N/A
2.10.5.4	Semiconductor devices		N/A
2.10.5.5.	Cemented joints		N/A
2.10.5.6	Thin sheet material – General		N/A
2.10.5.7	Separable thin sheet material		N/A
	Number of layers (pcs)..... :		—
2.10.5.8	Non-separable thin sheet material		N/A
2.10.5.9	Thin sheet material – standard test procedure		N/A
	Electric strength test		—
2.10.5.10	Thin sheet material – alternative test procedure		N/A
	Electric strength test		—
2.10.5.11	Insulation in wound components		N/A
2.10.5.12	Wire in wound components		N/A
	Working voltage ..... :		N/A
	a) Basic insulation not under stress ..... :		N/A
	b) Basic, supplementary, reinforced insulation ..... :		N/A
	c) Compliance with Annex U ..... :		N/A
	Two wires in contact inside wound component; angle between 45° and 90° ..... :		N/A
2.10.5.13	Wire with solvent-based enamel in wound components		N/A
	Electric strength test		—
	Routine test		N/A
2.10.5.14	Additional insulation in wound components		N/A
	Working voltage ..... :		N/A
	- Basic insulation not under stress ..... :		N/A

EN 60950-1			
Clause	Requirement + Test	Result - Remark	Verdict
	- Supplementary, reinforced insulation .....:		N/A
2.10.6	**Construction of printed boards**		Pass
2.10.6.1	Uncoated printed boards		Pass
2.10.6.2	Coated printed boards	No special coating is used.	N/A
2.10.6.3	Insulation between conductors on the same inner surface of a printed board		N/A
2.10.6.4	Insulation between conductors on different layers of a printed board		N/A
	Distance through insulation		N/A
	Number of insulation layers (pcs) .....:		N/A
2.10.7	**Component external terminations**		N/A
2.10.8	Tests on coated printed boards and coated components		N/A
2.10.8.1	Sample preparation and preliminary inspection		N/A
2.10.8.2	Thermal conditioning		N/A
2.10.8.3	Electric strength test		N/A
2.10.8.4	Abrasion resistance test		N/A
2.10.9	Thermal cycling		N/A
2.10.10	Test for Pollution Degree 1 environment and insulating compound		N/A
2.10.11	Tests for semiconductor devices and cemented joints		N/A
2.10.12	Enclosed and sealed parts		N/A

3	**WIRING, CONNECTIONS AND SUPPLY**		Pass
3.1	General		Pass
3.1.1	Current rating and overcurrent protection	All wires/conductors possess adequate cross-sectional areas for their intended application and Internal wiring are adequately insulated.	Pass
3.1.2	Protection against mechanical damage	The wires are well routed away from sharp edges , etc. and are adequately fixed to prevent excessive strain on wire and terminals	Pass

EN 60950-1			
Clause	Requirement + Test	Result - Remark	Verdict
3.1.3	Securing of internal wiring	The wires are positioned in such a manner that prevents excessive strain, loosening of terminal connections and damage of conductor.	Pass
3.1.4	Insulation of conductors	Insulation on internal conductors is considered to be of adequate quality and suitable for the application and the working voltages nvolved.	Pass
3.1.5	Beads and ceramic insulators		N/A
3.1.6	Screws for electrical contact pressure		N/A
3.1.7	Insulating materials in electrical connections		N/A
3.1.8	Self-tapping and spaced thread screws		N/A
3.1.9	Termination of conductors	All conductors are reliable secured.	Pass
	10 N pull test		N/A
3.1.10	Sleeving on wiring		N/A
3.2	**Connection to a mains supply**		N/A
3.2.1	Means of connection	No direct connection to mains supply.	N/A
3.2.1.1	Connection to an a.c. mains supply		N/A
3.2.1.2	Connection to a d.c. mains supply		N/A
3.2.2	Multiple supply connections		N/A
3.2.3	Permanently connected equipment		N/A
	Number of conductors, diameter of cable and conduits (mm) .....:		—
3.2.4	Appliance inlets		N/A
3.2.5	Power supply cords		N/A
3.2.5.1	AC power supply cords		N/A
	Type .....:		—
	Rated current (A), cross-sectional area (mm^2), AWG .....:		—
3.2.5.2	DC power supply cords		N/A
3.2.6	Cord anchorages and strain relief		N/A

EN 60950-1			
Clause	Requirement + Test	Result - Remark	Verdict

	Mass of equipment (kg), pull (N) .....:		—
	Longitudinal displacement (mm) .....:		—
3.2.7	Protection against mechanical damage		N/A
3.2.8	Cord guards		N/A
	Diameter or minor dimension D (mm); test mass (g) .....:		—
	Radius of curvature of cord (mm) .....:		—
3.2.9	Supply wiring space		N/A

3.3	**Wiring terminals for connection of external conductors**		N/A
3.3.1	Wiring terminals	Class III equipment.	N/A
3.3.2	Connection of non-detachable power supply cords		N/A
3.3.3	Screw terminals		N/A
3.3.4	Conductor sizes to be connected		N/A
	Rated current (A), cord/cable type, cross-sectional area (mm^2) .....:		—
3.3.5	Wiring terminal sizes		N/A
	Rated current (A), type, nominal thread diameter (mm) .....:		—
3.3.6	Wiring terminal design		N/A
3.3.7	Grouping of wiring terminals		N/A
3.3.8	Stranded wire		N/A

3.4	**Disconnection from the mains supply**		N/A
3.4.1	General requirement	Class III equipment.	N/A
3.4.2	Disconnect devices		N/A
3.4.3	Permanently connected equipment		N/A
3.4.4	Parts which remain energized		N/A
3.4.5	Switches in flexible cords		N/A
3.4.6	Number of poles - single-phase and d.c. equipment		N/A
3.4.7	Number of poles - three-phase equipment		N/A
3.4.8	Switches as disconnect devices		N/A
3.4.9	Plugs as disconnect devices		N/A

EN 60950-1			
Clause	Requirement + Test	Result - Remark	Verdict
3.4.10	Interconnected equipment		N/A
3.4.11	Multiple power sources		N/A
3.5	**Interconnection of equipment**		Pass
3.5.1	General requirements	SELV circuits.	Pass
3.5.2	Types of interconnection circuits .....:	Interconnection circuits are SELV Circuit.	Pass
3.5.3	ELV circuits as interconnection circuits	No ELV interconnections.	N/A
3.5.4	Data ports for additional equipment	(see appended table 2.5)	Pass
4	**PHYSICAL REQUIREMENTS**		Pass
4.1	Stability		N/A
	Angle of 10°	Less than 7kg	N/A
	Test force (N) .....:	Equipment is not a floor standing unit.	N/A
4.2	**Mechanical strength**		Pass
4.2.1	General	Class III equipment, PoE transformer has hazard voltage inside.	Pass
	Rack-mounted equipment.		N/A
4.2.2	Steady force test, 10 N		N/A
4.2.3	Steady force test, 30 N		N/A
4.2.4	Steady force test, 250 N	No hazards.	Pass
4.2.5	Impact test		Pass
	Fall test	No hazards.	Pass
	Swing test		N/A
4.2.6	Drop test; height (mm) .....:		N/A
4.2.7	Stress relief test		Pass
4.2.8	Cathode ray tubes	The equipment does not have any CRT.	N/A
	Picture tube separately certified .....:		N/A
4.2.9	High pressure lamps	The equipment does not have any high pressure lamps.	N/A

EN 60950-1			
Clause	Requirement + Test	Result - Remark	Verdict
4.2.10	Wall or ceiling mounted equipment; force (N) .....:	Mounting bracket withstands four times unit weight (50N Minimum.). Unit weight: 0.79 kg; Force applied: 6 kg	Pass
4.3	**Design and construction**		Pass
4.3.1	Edges and corners	All edges and corners judged to be sufficiently well rounded so as not to constitute a hazard.	Pass
4.3.2	Handles and manual controls; force (N) ..... :		N/A
4.3.3	Adjustable controls		N/A
4.3.4	Securing of parts		N/A
4.3.5	Connection by plugs and sockets		N/A
4.3.6	Direct plug-in equipment		N/A
	Torque .....:		—
	Compliance with the relevant mains plug standard .....:		N/A
4.3.7	Heating elements in earthed equipment		N/A
4.3.8	Batteries		N/A
	- Overcharging of a rechargeable battery		N/A
	- Unintentional charging of a non-rechargeable battery		N/A
	- Reverse charging of a rechargeable battery		N/A
	- Excessive discharging rate for any battery		N/A
4.3.9	Oil and grease		N/A
4.3.10	Dust, powders, liquids and gases		N/A
4.3.11	Containers for liquids or gases		N/A
4.3.12	Flammable liquids .....:		N/A
	Quantity of liquid (l) .....:		N/A
	Flash point (°C) .....:		N/A
4.3.13	Radiation		Pass
4.3.13.1	General		Pass
4.3.13.2	Ionizing radiation		N/A
	Measured radiation (pA/kg) .....:		—

EN 60950-1			
Clause	Requirement + Test	Result - Remark	Verdict
	Measured high-voltage (kV) .....:		—
	Measured focus voltage (kV) .....:		—
	CRT markings .....:		—
4.3.13.3	Effect of ultraviolet (UV) radiation on materials		N/A
	Part, property, retention after test, flammability classification .....:		N/A
4.3.13.4	Human exposure to ultraviolet (UV) radiation .....:		N/A
4.3.13.5	Lasers (including laser diodes) and LEDs	Contain indicator and IR LEDs, class 1	Pass
4.3.13.5.1	Lasers (including laser diodes)		N/A
	Laser class .....:		—
4.3.13.5.2	Light emitting diodes (LEDs)	This product contains only visible indicator and IR LEDs (Class 1).	Pass
4.3.13.6	Other types .....:		N/A
4.4	**Protection against hazardous moving parts**		N/A
4.4.1	General		N/A
4.4.2	Protection in operator access areas .....:		N/A
	Household and home/office document/media shredders		N/A
4.4.3	Protection in restricted access locations .....:		N/A
4.4.4	Protection in service access areas		N/A
4.4.5	Protection against moving fan blades		N/A
4.4.5.1	General		N/A
	Not considered to cause pain or injury. a)…….:		N/A
	Is considered to cause pain, not injury. b) …….:		N/A
	Considered to cause injury. c) …….:		N/A
4.4.5.2	Protection for users		N/A
	Use of symbol or warning ……:		N/A
4.4.5.3	Protection for service persons		N/A
	Use of symbol or warning ……:		N/A
4.5	**Thermal requirements**		Pass

EN 60950-1			
Clause	Requirement + Test	Result - Remark	Verdict
4.5.1	General	See appended table 4.5 for details.	Pass
4.5.2	Temperature tests	The equipment and its component parts did not attain excessive temperatures during normal operation. (see appended table 4.5)	Pass
	Normal load condition per Annex L .....:	Operated in the most unfavorable way of operation given in the operating instructions until steady conditions established.	—
4.5.3	Temperature limits for materials	(see appended table 4.5)	Pass
4.5.4	Touch temperature limits	(see appended table 4.5)	Pass
4.5.5	Resistance to abnormal heat .....:		N/A
4.6	**Openings in enclosures**		Pass
4.6.1	Top and side openings	No openings	Pass
	Dimensions (mm) .....:		—
4.6.2	Bottoms of fire enclosures	No openings	Pass
	Construction of the bottomm, dimensions (mm) ..:		—
4.6.3	Doors or covers in fire enclosures		N/A
4.6.4	Openings in transportable equipment	Not transportable equipment	N/A
4.6.4.1	Constructional design measures		N/A
	Dimensions (mm) .....:		—
4.6.4.2	Evaluation measures for larger openings		N/A
4.6.4.3	Use of metallized parts		N/A
4.6.5	Adhesives for constructional purposes		N/A
	Conditioning temperature (°C), time (weeks).....:		—
4.7	**Resistance to fire**		Pass
4.7.1	Reducing the risk of ignition and spread of flame	Method 1: Selection and application of components and materials which minimize the possibility of ignition and spread of flame.	Pass
	Method 1, selection and application of components wiring and materials	(See appended table 1.5.1 for details.)	Pass

EN 60950-1			
Clause	Requirement + Test	Result - Remark	Verdict

	Method 2, application of all of simulated fault condition tests		N/A
4.7.2	Conditions for a fire enclosure	Powered by LPS, no fire enclosure needed	N/A
4.7.2.1	Parts requiring a fire enclosure		N/A
4.7.2.2	Parts not requiring a fire enclosure		N/A
4.7.3	Materials		Pass
4.7.3.1	General	See below	Pass
4.7.3.2	Materials for fire enclosures	Power by LPS, no fire enclosure needed	N/A
4.7.3.3	Materials for components and other parts outside fire enclosures		N/A
4.7.3.4	Materials for components and other parts inside fire enclosures	All internal materials are rated HB or better or are mounted on a PWB rated V-1 or better	Pass
4.7.3.5	Materials for air filter assemblies		N/A
4.7.3.6	Materials used in high-voltage components		N/A

5	**ELECTRICAL REQUIREMENTS AND SIMULATED ABNORMAL CONDITIONS**		Pass
5.1	**Touch current and protective conductor current**		N/A
5.1.1	General	Class III equipment	N/A
5.1.2	Configuration of equipment under test (EUT)		N/A
5.1.2.1	Single connection to an a.c. mains supply		N/A
5.1.2.2	Redundant multiple connections to an a.c. mains supply		N/A
5.1.2.3	Simultaneous multiple connections to an a.c. mains supply		N/A
5.1.3	Test circuit		N/A
5.1.4	Application of measuring instrument		N/A
5.1.5	Test procedure		N/A
5.1.6	Test measurements		N/A
	Supply voltage (V) .....:		—
	Measured touch current (mA) .....:		—
	Max. allowed touch current (mA) .....:		—
	Measured protective conductor current (mA) .....:		—
	Max. allowed protective conductor current (mA)...:		—

EN 60950-1			
Clause	Requirement + Test	Result - Remark	Verdict
5.1.7	Equipment with touch current exceeding 3,5 mA		N/A
5.1.7.1	General .....:		N/A
5.1.7.2	Simultaneous multiple connections to the supply		N/A
5.1.8	Touch currents to telecommunication networks and cable distribution systems and from telecommunication networks		N/A
5.1.8.1	Limitation of the touch current to a telecommunication network or to a cable distribution system		N/A
	Supply voltage (V) .....:		—
	Measured touch current (mA) .....:		—
	Max. allowed touch current (mA) .....:		—
5.1.8.2	Summation of touch currents from telecommunication networks		N/A
	a) EUT with earthed telecommunication ports .....:		N/A
	b) EUT whose telecommunication ports have no reference to protective earth		N/A
5.2	**Electric strength**		N/A
5.2.1	General	Class III equipment	N/A
5.2.2	Test procedure		N/A
5.3	**Abnormal operating and fault conditions**		Pass
5.3.1	Protection against overload and abnormal operation		Pass
5.3.2	Motors		N/A
5.3.3	Transformers		N/A
5.3.4	Functional insulation.....:	Functional insulation complies with the requirements. (Method C)	Pass
5.3.5	Electromechanical components		N/A
5.3.6	Audio amplifiers in ITE .....:		N/A
5.3.7	Simulation of faults	Test have to conducted, due to EUT using Electric Double Layer Capacitor as RTC battery	Pass
5.3.8	Unattended equipment		N/A

EN 60950-1			
Clause	Requirement + Test	Result - Remark	Verdict
5.3.9	Compliance criteria for abnormal operating and fault conditions		Pass
5.3.9.1	During the tests		Pass
5.3.9.2	After the tests		N/A
6	**CONNECTION TO TELECOMMUNICATION NETWORKS**		N/A
6.1	Protection of telecommunication network service persons, and users of other equipment connected to the network, from hazards in the equipment		N/A
6.1.1	Protection from hazardous voltages		N/A
6.1.2	Separation of the telecommunication network from earth		N/A
6.1.2.1	Requirements		N/A
	Supply voltage (V) .....:		—
	Current in the test circuit (mA) .....:		—
6.1.2.2	Exclusions .....:		N/A
6.2	**Protection of equipment users from overvoltages on telecommunication networks**		N/A
6.2.1	Separation requirements	Not direct connection to TELECOMMUNICATION NETWORK	N/A
6.2.2	Electric strength test procedure		N/A
6.2.2.1	Impulse test		N/A
6.2.2.2	Steady-state test		N/A
6.2.2.3	Compliance criteria		N/A
6.3	**Protection of the telecommunication wiring system from overheating**		N/A
	Max. output current (A) .....:		—
	Current limiting method .....:		—
7	**CONNECTION TO CABLE DISTRIBUTION SYSTEMS**		N/A
7.1	General		N/A
7.2	Protection of cable distribution system service persons, and users of other equipment connected to the system, from hazardous voltages in the equipment		N/A

EN 60950-1			
Clause	Requirement + Test	Result - Remark	Verdict
7.3	Protection of equipment users from overvoltages on the cable distribution system		N/A
7.4	Insulation between primary circuits and cable distribution systems		N/A
7.4.1	General		N/A
7.4.2	Voltage surge test		N/A
7.4.3	Impulse test		N/A
A	**ANNEX A, TESTS FOR RESISTANCE TO HEAT AND FIRE**		N/A
A.1	Flammability test for fire enclosures of movable equipment having a total mass exceeding 18 kg, and of stationary equipment (see 4.7.3.2)		N/A
A.1.1	Samples .....:		—
	Wall thickness (mm).....:		—
A.1.2	Conditioning of samples; temperature (°C) .....:		N/A
A.1.3	Mounting of samples .....:		N/A
A.1.4	Test flame (see IEC 60695-11-3)		N/A
	Flame A, B, C or D .....:		—
A.1.5	Test procedure		N/A
A.1.6	Compliance criteria		N/A
	Sample 1 burning time (s).....:		—
	Sample 2 burning time (s).....:		—
	Sample 3 burning time (s).....:		—
A.2	Flammability test for fire enclosures of movable equipment having a total mass not exceeding 18 kg, and for material and components located inside fire enclosures (see 4.7.3.2 and 4.7.3.4)		N/A
A.2.1	Samples, material .....:		—
	Wall thickness (mm).....:		—
A.2.2	Conditioning of samples; temperature (°C) .....:		N/A
A.2.3	Mounting of samples .....:		N/A
A.2.4	Test flame (see IEC 60695-11-4)		N/A
	Flame A, B or C .....:		—
A.2.5	Test procedure		N/A
A.2.6	Compliance criteria		N/A
	Sample 1 burning time (s).....:		—

EN 60950-1			
Clause	Requirement + Test	Result - Remark	Verdict
	Sample 2 burning time (s) .....:		—
	Sample 3 burning time (s) .....:		—
A.2.7	Alternative test acc. to IEC 60695-11-5, cl. 5 and 9		N/A
	Sample 1 burning time (s) .....:		—
	Sample 2 burning time (s) .....:		—
	Sample 3 burning time (s) .....:		—
A.3	Hot flaming oil test (see 4.6.2)		N/A
A.3.1	Mounting of samples		N/A
A.3.2	Test procedure		N/A
A.3.3	Compliance criterion		N/A

B	**ANNEX B, MOTOR TESTS UNDER ABNORMAL CONDITIONS (see 4.7.2.2 and 5.3.2)**		N/A
B.1	General requirements		N/A
	Position .....:		—
	Manufacturer .....:		—
	Type .....:		—
	Rated values .....:		—
B.2	Test conditions		N/A
B.3	Maximum temperatures		N/A
B.4	Running overload test		N/A
B.5	Locked-rotor overload test		N/A
	Test duration (days) .....:		—
	Electric strength test: test voltage (V) .....:		—
B.6	Running overload test for d.c. motors in secondary circuits		N/A
B.6.1	General		N/A
B.6.2	Test procedure		N/A
B.6.3	Alternative test procedure		N/A
B.6.4	Electric strength test; test voltage (V) .....:		N/A
B.7	Locked-rotor overload test for d.c. motors in secondary circuits		N/A
B.7.1	General		N/A
B.7.2	Test procedure		N/A

EN 60950-1			
Clause	Requirement + Test	Result - Remark	Verdict
B.7.3	Alternative test procedure		N/A
B.7.4	Electric strength test; test voltage (V) .....:		N/A
B.8	Test for motors with capacitors		N/A
B.9	Test for three-phase motors		N/A
B.10	Test for series motors		N/A
	Operating voltage (V) .....:		—
C	**ANNEX C, TRANSFORMERS (see 1.5.4 and 5.3.3)**		N/A
	Position .....:		—
	Manufacturer .....:		—
	Type .....:		—
	Rated values .....:		—
	Method of protection .....:		—
C.1	Overload test		N/A
C.2	Insulation		N/A
	Protection from displacement of windings .....:		N/A
D	**ANNEX D, MEASURING INSTRUMENTS FOR TOUCH-CURRENT TESTS (see 5.1.4)**		N/A
D.1	Measuring instrument		N/A
D.2	Alternative measuring instrument		N/A
E	**ANNEX E, TEMPERATURE RISE OF A WINDING (see 1.4.13)**		N/A
F	**ANNEX F, MEASUREMENT OF CLEARANCES AND CREEPAGE DISTANCES (see 2.10 and Annex G)**		Pass
G	**ANNEX G, ALTERNATIVE METHOD FOR DETERMINING MINIMUM CLEARANCES**		N/A
G.1	Clearances		N/A
G.1.1	General		N/A
G.1.2	Summary of the procedure for determining minimum clearances		N/A
G.2	Determination of mains transient voltage (V)		N/A

EN 60950-1			
Clause	Requirement + Test	Result - Remark	Verdict
G.2.1	AC mains supply .....:		N/A
G.2.2	Earthed d.c. mains supplies .....:		N/A
G.2.3	Unearthed d.c. mains supplies .....:		N/A
G.2.4	Battery operation .....:		N/A
G.3	Determination of telecommunication network transient voltage (V) .....:		N/A
G.4	Determination of required withstand voltage (V)		N/A
G.4.1	Mains transients and internal repetitive peaks .....:		N/A
G.4.2	Transients from telecommunication networks .....:		N/A
G.4.3	Combination of transients		N/A
G.4.4	Transients from cable distribution systems		N/A
G.5	Measurement of transient voltages (V)		N/A
	a) Transients from a mains supply		N/A
	For an a.c. mains supply		N/A
	For a d.c. mains supply		N/A
	b) Transients from a telecommunication network		N/A
G.6	Determination of minimum clearances .....:		N/A
H	**ANNEX H, IONIZING RADIATION (see 4.3.13)**		N/A
J	**ANNEX J, TABLE OF ELECTROCHEMICAL POTENTIALS (see 2.6.5.6)**		N/A
	Metal(s) used .....:		—
K	**ANNEX K, THERMAL CONTROLS (see 1.5.3 and 5.3.8)**		N/A
K.1	Making and breaking capacity		N/A
K.2	Thermostat reliability; operating voltage (V) .....:		N/A
K.3	Thermostat endurance test; operating voltage (V) .....:		N/A
K.4	Temperature limiter endurance; operating voltage (V) .....:		N/A
K.5	Thermal cut-out reliability		N/A
K.6	Stability of operation		N/A
L	**ANNEX L, NORMAL LOAD CONDITIONS FOR SOME TYPES OF ELECTRICAL BUSINESS EQUIPMENT (see 1.2.2.1 and 4.5.2)**		Pass

EN 60950-1			
Clause	Requirement + Test	Result - Remark	Verdict
L.1	Typewriters		N/A
L.2	Adding machines and cash registers		N/A
L.3	Erasers		N/A
L.4	Pencil sharpeners		N/A
L.5	Duplicators and copy machines		N/A
L.6	Motor-operated files		N/A
L.7	Other business equipment		Pass
M	**ANNEX M, CRITERIA FOR TELEPHONE RINGING SIGNALS (see 2.3.1)**		N/A
M.1	Introduction		N/A
M.2	Method A		N/A
M.3	Method B		N/A
M.3.1	Ringing signal		N/A
M.3.1.1	Frequency (Hz) .....:		—
M.3.1.2	Voltage (V) .....:		—
M.3.1.3	Cadence; time (s), voltage (V) .....:		—
M.3.1.4	Single fault current (mA) .....:		—
M.3.2	Tripping device and monitoring voltage .....:		N/A
M.3.2.1	Conditions for use of a tripping device or a monitoring voltage		N/A
M.3.2.2	Tripping device		N/A
M.3.2.3	Monitoring voltage (V) .....:		N/A
N	**ANNEX N, IMPULSE TEST GENERATORS (see 1.5.7.2, 1.5.7.3, 2.10.3.9, 6.2.2.1, 7.3.2, 7.4.3 and Clause G.5)**		N/A
N.1	ITU-T impulse test generators		N/A
N.2	IEC 60065 impulse test generator		N/A
P	**ANNEX P, NORMATIVE REFERENCES**		—
Q	**ANNEX Q, Voltage dependent resistors (VDRs) (see 1.5.9.1)**		N/A
	- Preferred climatic categories .....:	Evaluated during separate certification of power supply.	N/A
	- Maximum continuous voltage .....:		N/A

EN 60950-1			
Clause	Requirement + Test	Result - Remark	Verdict
	- Combination pulse current .....:		N/A
	Body of the VDR Test according to IEC60695-11-5.....:		N/A
	Body of the VDR. Flammability class of material (min V-1).....:		N/A
R	**ANNEX R, EXAMPLES OF REQUIREMENTS FOR QUALITY CONTROL PROGRAMMES**		N/A
R.1	Minimum separation distances for unpopulated coated printed boards (see 2.10.6.2)		N/A
R.2	Reduced clearances (see 2.10.3)		N/A
S	**ANNEX S, PROCEDURE FOR IMPULSE TESTING (see 6.2.2.3)**		N/A
S.1	Test equipment		N/A
S.2	Test procedure		N/A
S.3	Examples of waveforms during impulse testing		N/A
T	**ANNEX T, GUIDANCE ON PROTECTION AGAINST INGRESS OF WATER (see 1.1.2)**		N/A
			—
U	**ANNEX U, INSULATED WINDING WIRES FOR USE WITHOUT INTERLEAVED INSULATION (see 2.10.5.4)**		N/A
		See separate test report	—
V	**ANNEX V, AC POWER DISTRIBUTION SYSTEMS (see 1.6.1)**		N/A
V.1	Introduction		N/A
V.2	TN power distribution systems		N/A
W	**ANNEX W, SUMMATION OF TOUCH CURRENTS**		N/A
W.1	Touch current from electronic circuits		N/A
W.1.1	Floating circuits		N/A
W.1.2	Earthed circuits		N/A
W.2	Interconnection of several equipments		N/A
W.2.1	Isolation		N/A

EN 60950-1			
Clause	Requirement + Test	Result - Remark	Verdict
W.2.2	Common return, isolated from earth		N/A
W.2.3	Common return, connected to protective earth		N/A
X	**ANNEX X, MAXIMUM HEATING EFFECT IN TRANSFORMER TESTS (see clause C.1)**		N/A
X.1	Determination of maximum input current		N/A
X.2	Overload test procedure		N/A
Y	**ANNEX Y, ULTRAVIOLET LIGHT CONDITIONING TEST (see 4.3.13.3)**		N/A
Y.1	Test apparatus .....:		N/A
Y.2	Mounting of test samples .....:		N/A
Y.3	Carbon-arc light-exposure apparatus .....:		N/A
Y.4	Xenon-arc light exposure apparatus .....:		N/A
Z	**ANNEX Z, OVERVOLTAGE CATEGORIES (see 2.10.3.2 and Clause G.2)**		Pass
AA	**ANNEX AA, MANDREL TEST (see 2.10.5.8)**		N/A
BB	**ANNEX BB, CHANGES IN THE SECOND EDITION**		—
CC	**ANNEX CC, Evaluation of integrated circuit (IC) current limiters**		N/A
CC.1	General		N/A
CC.2	Test program 1……..:		N/A
CC.3	Test program 2……..:		N/A
CC.4	Test program 3.....:		N/A
CC.5	Compliance.....:		N/A
DD	**ANNEX DD, Requirements for the mounting means of rack-mounted equipment**		N/A
DD.1	General		N/A
DD.2	Mechanical strength test, variable N……..:		N/A
DD.3	Mechanical strength test, 250N, including end stops……:		N/A
DD.4	Compliance……:		N/A

EN 60950-1			
Clause	Requirement + Test	Result - Remark	Verdict

EE	**ANNEX EE, Household and home/office document/media shredders**		N/A
EE.1	General		N/A
EE.2	Markings and instructions		N/A
	Use of markings or symbols……:		N/A
	Information of user instructions, maintenance and/or servicing instructions……:		N/A
EE.3	Inadvertent reactivation test……:		N/A
EE.4	Disconnection of power to hazardous moving parts:		N/A
	Use of markings or symbols……:		N/A
EE.5	Protection against hazardous moving parts		N/A
	Test with test finger (Figure 2A) ……:		N/A
	Test with wedge probe (Figure EE1 and EE2) ……:		N/A

EN 60950-1			
Clause	Requirement + Test	Result - Remark	Verdict

1.5.1	TABLE: List of critical components				Pass
Object/part No.	Manufacturer/ trademark	Type/model	Technical data	Standard (Edition / year)	Mark(s) of conformity[1])
01. Plastic Enclosure	TEIJIN CHEMICALS PLASTIC COMPOUNDS SHANGHAI LTD	TN-7000(v)	V-1 minimum, 1.9 mm thickness minimum, 85 °C, overall see Enclosure /Diagrams ID 4-01 for details	UL 94, UL 746C	UL
01-1. Metal Enclosure	--	--	Aluminum, 2.0 mm thickness minimum, overall see Enclosure /Diagrams ID 4-01 for details.	--	--
02. PWB	Various	Various	V-1 min., 105 °C min.	UL 796	UL
03. Transformer of PoE (T1)	Acroparts Technology Co., Ltd.	13W12V	105 °C, see Enclosure/Diagrams ID 4-03 for details.	--	--
03a. Transformer of PoE (T1) (Alternate)	AUDIX TECHNOLOGY (XIAMEN) Co., LTD.	POE13F-12L	105 °C, see Enclosure/Diagrams ID 4-04 for details.	--	--
04. Electric Double Layer Capacitor (BT1)	ELNA CO., LTD	DX Series	Rated 0.33F.	--	--
05. Mounting Kit (optional)	--	--	Metal, overall see Enclosure/Diagrams ID 4-02 for detail.	--	--

Supplementary information:

[1)] Provided evidence ensures the agreed level of compliance. See OD-CB2039.

EN 60950-1			
Clause	Requirement + Test	Result - Remark	Verdict

1.5.1	TABLE: Opto Electronic Devices	N/A

Manufacturer ..... :

Type ..... :

Separately tested ..... :

Bridging insulation ..... :

External creepage distance ..... :

Internal creepage distance ..... :

Distance through insulation ..... :

Tested under the following conditions ..... :

Input ..... :

Output ..... :

supplementary information

EN 60950-1			
Clause	Requirement + Test	Result - Remark	Verdict

1.6.2	TABLE: Electrical data (in normal conditions)						Pass
U (V)	I (A)	Irated (A)	P (W)	Fuse #	Ifuse (A)	Condition/status	
36Vdc	0.357	0.36	12.85	--	--	Maximum normal load	
57Vdc	0.221	0.23	12.60	--	--	Maximum normal load	
Supplementary information: Maximum Normal Load: Unit transfer video signal from RJ-45 connected to the computer, one USB port loaded 2.42W(max. continuously load), terminal block J7 pin1 loaded 12V, 50mA, and working continuously.							

2.1.1.5 c) 1)	TABLE: max. V, A, VA test				N/A
Voltage (rated) (V)	Current (rated) (A)	Voltage (max.) (V)	Current (max.) (A)	VA (max.) (VA)	
--	--	--	--	--	
supplementary information:					
--					

2.1.1.5 c) 2)	TABLE: stored energy		N/A
Capacitance C (μF)	Voltage U (V)	Energy E (J)	
--	--	--	
supplementary information:			
--			

2.2	TABLE: evaluation of voltage limiting components in SELV circuits		Pass
Component (measured between)	max. voltage (V) (normal operation)		Voltage Limiting Components
	V peak	V d.c.	
T1 Pin1,2 to RTN	--	58.0	--
T1 Pin7,8 to RTN	21.6	--	--
T1 Pin10 to RTN	21.6	--	--
T1 Pin11,12 to RTN	122	--	--
U40 Pin1 to RTN	5.20	--	--
U40 Pin2 to RTN	3.80	--	--

EN 60950-1			
Clause	Requirement + Test	Result - Remark	Verdict

U40 Pin4 to RTN	12.6	--	--

Fault test performed on voltage limiting components	Voltage measured (V) in SELV circuits (V peak or V d.c.)
T1 Pin1,2 to 7,8 short	USB: 0Vdc, Terminal block: 5Vdc (Unit shutdown, no hazard)
T1 Pin1,2 to metal enclosure short	USB: 0Vdc, Terminal block: 5Vdc (Unit shutdown, no hazard)
T1 Pin1,2 to 7,8 short (U40 Pin1 open)	USB: 0Vdc, Terminal block: 0Vdc (Unit shutdown, no hazard)
T1 Pin1,2 to 7,8 short (U40 Pin1 to 2 short)	USB: 0Vdc, Terminal block: 0Vdc (Unit shutdown, no hazard)
T1 Pin1,2 to 7,8 short (U40 Pin3 to 4 short)	USB: 0Vdc, Terminal block: 0Vdc (Unit shutdown, no hazard)
T1 Pin11,12 to 7,8 short	USB: 0Vdc, Terminal block: 5Vdc (Unit shutdown, no hazard)
T1 Pin11,12 to metal enclosure short	USB: 0Vdc, Terminal block: 5Vdc (Unit shutdown, no hazard)
T1 Pin11,12 to 7,8 short (U40 Pin1 open)	USB: 0Vdc, Terminal block: 0Vdc (Unit shutdown, no hazard)
T1 Pin11,12 to 7,8 short (U40 Pin1 to 2 short)	USB: 0Vdc, Terminal block: 0Vdc (Unit shutdown, no hazard)
T1 Pin11,12 to 7,8 short (U40 Pin3 to 4 short)	USB: 0Vdc, Terminal block: 0Vdc (Unit shutdown, no hazard)
supplementary information:	
The following terminals were connected to earth: T1 Pin 3	

2.5	TABLE: Limited power sources	Pass

Circuit output tested:

Note: Measured Uoc (V) with all load circuits disconnected:

Components	Sample No.	Uoc (V)	I_{sc} (A)		VA	
			Meas.	Limit	Meas.	Limit
Test voltage: 57Vdc (POE)						
Regulating network						
USB Pin1 Normal condition	01	5.11Vdc	0.50	8	2.42 (4.83V*0.50A)	100

EN 60950-1						
Clause	Requirement + Test			Result - Remark		Verdict
USB Pin1 Single fault: U32 pin5-1 short	01	5.11Vdc	2.80	8	5.10 (1.96V*2.60A)	100
USB Pin1 Single fault: U1 pin2-3 short	01	5.11Vdc	3.10	8	6.12 (2.04V*3.00A)	100
Micro SD Pin4 Normal condition	01	4.32Vdc	2.5	8	4.97 (2.07V*2.40A)	100
Micro SD Pin4, Single fault: U69 Pin14,15 to 12,13 short	01	0Vdc	0	8	0	100
Terminal Block Pin4, Normal condition	01	11.93Vdc	1.80	8	8.55 (5.03V*1.70A)	100
Inherently limited						
Micro SD Pin2,3,7,8, Normal condition	01	3.19Vdc	0.01	8	0.01	100
USB Pin2-4, Normal condition	01	0Vdc	0	8	0	100
Micro SD Pin1,5,6,9, Normal condition	01	0Vdc	0	8	0	100
Terminal Block Pin1-3 Normal condition	01	0Vdc	0	8	0	100
supplementary information:						
Sc=Short circuit, Oc=Open circuit						

EN 60950-1			
Clause	Requirement + Test	Result - Remark	Verdict

2.10.2	Table: working voltage measurement			N/A
Location	RMS voltage (V)	Peak voltage (V)	Comments	
--	--	--	--	
supplementary information:				
--				

2.10.3 and 2.10.4	TABLE: Clearance and creepage distance measurements					Pass
Clearance (cl) and creepage distance (cr) at/of/between:	U peak (V)	U r.m.s. (V)	Required cl (mm)	cl (mm)	Required cr (mm)	cr (mm)
Functional:						
--	--	--	--	--	--	--
Basic/supplementary:						
--	--	--	--	--	--	--
Reinforced:						
--	--	--	--	--	--	--
Supplementary information: All circuit are SELV, only functional insulation is required.						

2.10.5	TABLE: Distance through insulation measurements				N/A
Distance through insulation (DTI) at/of:	U peak (V)	U rms (V)	Test voltage (V)	Required DTI (mm)	DTI (mm)
--	--	--	--	--	--
Supplementary information: --					

4.3.8	TABLE: Batteries		N/A
The tests of 4.3.8 are applicable only when appropriate battery data is not available		--	--
Is it possible to install the battery in a reverse polarity position?		--	--
	Non-rechargeable batteries	Rechargeable batteries	

EN 60950-1			
Clause	Requirement + Test	Result - Remark	Verdict

	Discharging		Un-intentional charging	Charging		Discharging		Reversed charging	
	Meas. current	Manuf. Specs.		Meas. current	Manuf. Specs.	Meas. current	Manuf. Specs.	Meas. current	Manuf. Specs.
Max. current during normal condition	--	--	--	--	--	--	--	--	--
Max. current during fault condition 1	--	--	--	--	--	--	--	--	--
Max. current during fault condition 2	--	--	--	--	--	--	--	--	--

Test results:	--	Verdict
- Chemical leaks	--	N/A
- Explosion of the battery	--	N/A
- Emission of flame or expulsion of molten metal	--	N/A
- Electric strength tests of equipment after completion of tests	--	N/A
Supplementary information: --		

4.3.8	TABLE: Batteries	N/A

Battery category .....: --
Manufacturer .....: --
Type / model .....: --
Voltage.....: --
Capacity.....: --
Tested and Certified by (incl. Ref. No.) .....: --
Circuit protection diagram: --

--

EN 60950-1			
Clause	Requirement + Test	Result - Remark	Verdict

MARKINGS AND INSTRUCTIONS (1.7.13)	
Location of replaceable battery	--
Language(s) …….:	--
Close to the battery …….:	--
In the servicing instructions …….:	--
In the operating instructions ……..:	--

4.5	TABLE: Thermal requirements						Pass
	Supply voltage (V)	See below	See below	--	--	--	—
	Ambient T_{min} (°C)	See below	See below	--	--	--	—
	Ambient T_{max} (°C)	See below	See below	--	--	--	—
Maximum measured temperature T of part/at::		T (°C)					Allowed T_{max} (°C)
--		Maximum Normal Load at 36Vdc (Wall)	Maximum Normal Load at 36Vdc, Shift to Tma 40 (Wall)	Maximum Normal Load at 36Vdc (Ceiling)	Maximum Normal Load at 36Vdc, Shift to Tma 40 (Ceiling)	--	--
01.Ambient		24.6	40.0	24.6	40.0	--	--
For main board		--	--	--	--	--	--
02.T3 coil		51.6	67.0	50.9	66.3	--	105
03.PWB near U6		57.9	73.3	56.6	72.0	--	105
04.PWB near U9		58.3	73.7	57.3	72.7	--	105
05.BT1 body		54.9	70.3	53.8	69.2	--	100
06.PWB near U5		61.1	76.5	59.9	75.3	--	105
07.L3 coil		58.0	73.4	57.3	72.7	--	105
For I/O board		--	--	--	--	--	--
08.DC terminal block		54.4	69.8	53.1	68.5	--	95
09.L8 coil		66.1	81.5	64.1	79.5	--	105
10.C363 body		60.2	75.6	58.6	74.0	--	85

EN 60950-1						
Clause	Requirement + Test			Result - Remark		Verdict
11.T1 coil	63.1	78.5	61.3	76.7	--	105
12.T1 core	57.6	73.0	56.1	71.5	--	105
13.PWB near U69	60.2	75.6	57.9	73.3	--	105
For Sensor board near BT1	--	--	--	--	--	--
14.PWB near U5	52.9	68.3	51.8	67.2	--	105
15.Plastic enclosure inside near top	52.7	68.1	51.8	67.2	--	85
16.Plastic enclosure outside near top	41.7	57.1	36.9	52.3	--	95
17.Metal enclosure outside near U5	54.2	69.6	52.5	67.9	--	70
Test duration	3.1hrs	3.1hrs	1.9hrs	1.9hrs	--	--
--	Maximum Normal Load at 57Vdc (Wall)	Maximum Normal Load at 57Vdc, Shift to Tma 40 (Wall)	--	--	--	--
01.Ambient	24.4	40.0	--	--	--	--
For main board	--	--	--	--	--	--
02.T3 coil	51.1	66.7	--	--	--	105
03.PWB near U6	57.3	72.9	--	--	--	105
04.PWB near U9	57.9	73.5	--	--	--	105
05.BT1 body	54.5	70.1	--	--	--	100
06.PWB near U5	60.6	76.2	--	--	--	105
07.L3 coil	57.6	73.2	--	--	--	105
For I/O board	--	--	--	--	--	--
08.DC terminal block	53.8	69.4	--	--	--	95
09.L8 coil	65.2	80.8	--	--	--	105
10.C363 body	59.5	75.1	--	--	--	85
11.T1 coil	62.7	78.3	--	--	--	105
12.T1 core	57.1	72.7	--	--	--	105
13.PWB near U69	58.6	74.2	--	--	--	105
For Sensor board near BT1	--	--	--	--	--	--
14.PWB near U5	52.5	68.1	--	--	--	105
15.Plastic enclosure inside near top	52.1	67.7	--	--	--	85

EN 60950-1			
Clause	Requirement + Test	Result - Remark	Verdict

16.Plastic enclosure outside near top		40.3	55.9	--	--	--	95
17.Metal enclosure outside near U5		53.5	69.1	--	--	--	70
Test duration		2.3hrs	2.3hrs	--	--	--	--
Supplementary information:							
Temperature T of winding:	t_1 (°C)	R_1 (Ω)	t_2 (°C)	R_2 (Ω)	T (°C)	Allowed T_{max} (°C)	Insulation class
--	--	--	--	--	--	--	--
Supplementary information:							

Comments:

The temperatures were measured under worst case normal mode defined in 1.2.2.1 and as described in 1.6.1 at voltages as described in 1.6.5.

With a specified ambient temperature of 40 °C, the max. temperature is calculated as follows:

Components with:

- max. absolute temp. of 85 °C (Capacity)
- max. absolute temp. of 100 °C (Photo coupler)
- max. absolute temp. of 105 °C (Choke)
- max. absolute temp. of 105 °C (PCB)
- when no class of insulation is given, min. insulation 105 °C assumed.

User accessible area:

- material is metal (70 °C)
- material is plastic (95 °C)

4.5.5	TABLE: Ball pressure test of thermoplastic parts		N/A
	Allowed impression diameter (mm) ..... :	≤ 2 mm	—
Part		Test temperature (°C)	Impression diameter (mm)
--		--	--
Supplementary information: --			

4.7	TABLE: Resistance to fire				N/A
Part	Manufacturer of material	Type of material	Thickness (mm)	Flammability class	Evidence
--	--	--	--	--	--
Supplementary information: Powered by LPS, no fire enclosure needed					

EN 60950-1			
Clause	Requirement + Test	Result - Remark	Verdict

5.1	TABLE: touch current measurement	N/A

Measured between:	Measured (mA)	Limit (mA)	Comments/conditions
--	--	--	--
supplementary information:			
--			

5.2	TABLE: Electric strength tests, impulse tests and voltage surge tests	N/A

Test voltage applied between:	Voltage shape (AC, DC, impulse, surge)	Test voltage (V)	Breakdown Yes / No
Functional:			
--	--	--	--
Basic/supplementary:			
--	--	--	--
Reinforced:			
--	--	--	--
Supplementary information: --			

5.3	TABLE: Fault condition tests	Pass
	Ambient temperature (°C) ..... :	see below for detail —
	Power source for EUT: Manufacturer, model/type, output rating ..... :	From DC power supply —

Component No.	Fault	Supply voltage (V)	Test time	Fuse #	Fuse current (A)	Observation
--	--	--	--	--	--	5.3.1, 5.3.4, 5.3.7 Component Failure Test
01.BT1	Short	57Vdc	30mins	--	--	NC, NT, Unit shutdown, Meausred input current: 0.037A
02.U69 Pin14,15-12,13	Short	57Vdc	30mins	--	--	NC, NT, Unit shutdown, Meausred input current: 0.01A

EN 60950-1			
Clause	Requirement + Test	Result - Remark	Verdict

Supplementary information:
Results Key:
NC = Cheesecloth remained intact
NT = Tissue paper remained intact

C.2	TABLE: transformers						N/A
Loc.	Tested insulation	Working voltage peak / V (2.10.2)	Working voltage rms / V (2.10.2)	Required electric strength (5.2)	Required clearance / mm (2.10.3)	Required creepage distance / mm (2.10.4)	Required distance thr. insul. (2.10.5)
--	--	--	--	--	--	--	--
Loc.	Tested insulation			Test voltage/ V	Measured clearance / mm	Measured creepage dist./ mm	Measured distance thr. insul. / mm; number of layers
--	--			--	--	--	--
supplementary information:							

C.2	TABLE: transformers	N/A
Transformer --		

National Differences

Group

* No National Differences Declared
** Only Group Differences

Attachment No. 1			
SubClause	Difference + Test	Result - Remark	Verdict

ATTACHMENT TO TEST REPORT IEC 60950-1
EUROPEAN GROUP DIFFERENCES AND NATIONAL DIFFERENCES
Information technology equipment – Safety –
Part 1: General requirements

Differences according to ..... : EN 60950-1:2006/A11:2009/A1:2010/A12:2011/A2:2013

Attachment Form No. ..... : EU_GD_IEC60950_1F
Attachment Originator ..... : SGS Fimko Ltd
Master Attachment ..... : Date 2014-02

Copyright © 2014 IEC System for Conformity Testing and Certification of Electrical Equipment (IECEE), Geneva, Switzerland. All rights reserved.

EN 60950-1:2006/A11:2009/A1:2010/A12:2011/A2:2013 – CENELEC COMMON MODIFICATIONS

IEC 60950-1, GROUP DIFFERENCES (CENELEC common modifications EN)			
Clause	Requirement + Test	Result - Remark	Verdict
	Clauses, subclauses, notes, tables and figures which are additional to those in IEC60950-1 and it´s amendmets are prefixed “Z”		Pass
Contents (A2:2013)	Add the following annexes: Annex ZA (normative) Normative references to international publications with their corresponding European publications Annex ZB (normative) Special national conditions Annex ZD (informative) IEC and CENELEC code designations for flexible cords		Pass
General	Delete all the “country” notes in the reference document (IEC 60950-1:2005) according to the following list: 1.4.8 Note 2 1.5.1 Note 2 & 3 1.5.7.1 Note 1.5.8 Note 2 1.5.9.4 Note 1.7.2.1 Note 4, 5 & 6 2.2.3 Note 2.2.4 Note 2.3.2 Note 2.3.2.1 Note 2 2.3.4 Note 2 2.6.3.3 Note 2 & 3 2.7.1 Note 2.10.3.2 Note 2 2.10.5.13 Note 3 3.2.1.1 Note 3.2.4 Note 3. 2.5.1 Note 2 4.3.6 Note 1 & 2 4.7 Note 4 4.7.2.2 Note 4.7.3.1Note 2 5.1.7.1 Note 3 & 4 5.3.7 Note 1 6 Note 2 & 5 6.1.2.1 Note 2 6.1.2.2 Note 6.2.2 Note 6.2.2.1 Note 2 6.2.2.2 Note 7.1 Note 3 7.2 Note 7.3 Note 1 & 2 G.2.1 Note 2 Annex H Note 2		Pass
General (A1:2010)	Delete all the “country” notes in the reference document (IEC 60950-1:2005/A1:2010) according to the following list: 1.5.7.1 Note 6.1.2.1 Note 2 6.2.2.1 Note 2 EE.3 Note		Pass

Attachment No. 1			
SubClause	Difference + Test	Result - Remark	Verdict

IEC 60950-1, GROUP DIFFERENCES (CENELEC common modifications EN)			
Clause	Requirement + Test	Result - Remark	Verdict
General (A2:2013)	Delete all the "country" notes in the reference document (IEC 60950-1:2005/A2:2013) according to the following list: 2.7.1 Note * 2.10.3.1 Note 2 6.2.2. Note * Note of secretary: Text of Common Modification remains unchanged.		Pass
1.1.1 (A1:2010)	**Replace** the text of NOTE 3 by the following. NOTE 3 The requirements of EN 60065 may also be used to meet safety requirements for multimedia equipment. See IEC Guide 112, Guide on the safety of multimedia equipment. For television sets EN 60065 applies.		Pass
1.3.Z1	Add the following subclause: 1.3.Z1 Exposure to excessive sound pressure The apparatus shall be so designed and constructed as to present no danger when used for its intended purpose, either in normal operating conditions or under fault conditions, particularly providing protection against exposure to excessive sound pressures from headphones or earphones. NOTE Z1 A new method of measurement is described in EN 50332-1, Sound system equipment: Headphones and earphones associated with portable audio equipment - Maximum sound pressure level measurement methodology and limit considerations - Part 1: General method for "one package equipment", and in EN 50332-2, Sound system equipment: Headphones and earphones associated with portable audio equipment - Maximum sound pressure level measurement methodology and limit considerations - Part 2: Guidelines to associate sets with headphones coming from different manufacturers.		N/A
(A12:2011)	In EN 60950-1:2006/A12:2011 Delete the addition of 1.3.Z1 / EN 60950-1:2006 Delete the definition 1.2.3.Z1 / EN 60950-1:2006 /A1:2010		Pass
1.5.1 (Added info*)	Add the following NOTE: NOTE Z1 The use of certain substances in electrical and electronic equipment is restricted within the EU: see Directive 2002/95/EC. New Directive 2011/65/11 *		N/A
1.7.2.1 (A1:2010)	In addition, for a PORTABLE SOUND SYSTEM, the instructions shall include a warning that excessive sound pressure from earphones and headphones can cause hearing loss.		N/A

Attachment No. 1			
SubClause	Difference + Test	Result - Remark	Verdict

IEC 60950-1, GROUP DIFFERENCES (CENELEC common modifications EN)			
Clause	Requirement + Test	Result - Remark	Verdict
1.7.2.1 (A12.2011)	In EN 60950-1:2006/A12:2011 Delete NOTE Z1 and the addition for Portable Sound System. Add the following clause and annex to the existing standard and amendments.		N/A
	Zx Protection against excessive sound pressure from personal music players		N/A
	Zx.1 General This sub-clause specifies requirements for protection against excessive sound pressure from personal music players that are closely coupled to the ear. It also specifies requirements for earphones and headphones intended for use with personal music players. A personal music player is a portable equipment for personal use, that: is designed to allow the user to listen to recorded or broadcast sound or video; and primarily uses headphones or earphones that can be worn in or on or around the ears; and allows the user to walk around while in use. NOTE 1 Examples are hand-held or body-worn portable CD players, MP3 audio players, mobile phones with MP3 type features, PDA's or similar equipment. A personal music player and earphones or headphones intended to be used with personal music players shall comply with the requirements of this sub-clause. The requirements in this sub-clause are valid for music or video mode only. The requirements do not apply: while the personal music player is connected to an external amplifier; or while the headphones or earphones are not used. NOTE 2 An external amplifier is an amplifier which is not part of the personal music player or the listening device, but which is intended to play the music as a standalone music player. The requirements do not apply to: hearing aid equipment and professional equipment; NOTE 3 Professional equipment is equipment sold through special sales channels. All products sold through normal electronics stores are considered not to be professional equipment.		N/A

Attachment No. 1			
SubClause	Difference + Test	Result - Remark	Verdict

IEC 60950-1, GROUP DIFFERENCES (CENELEC common modifications EN)			
Clause	Requirement + Test	Result - Remark	Verdict
	analogue personal music players (personal music players without any kind of digital processing of the sound signal) that are brought to the market before the end of 2015. NOTE 4 This exemption has been allowed because this technology is falling out of use and it is expected that within a few years it will no longer exist. This exemption will not be extended to other technologies. For equipment which is clearly designed or intended for use by young children, the limits of EN 71-1 apply.		N/A
	Zx.2 Equipment requirements No safety provision is required for equipment that complies with the following: equipment provided as a package (personal music player with its listening device), where the acoustic output $L_{Aeq,T}$ is ≤ 85 dBA measured while playing the fixed "programme simulation noise" as described in EN 50332-1; and a personal music player provided with an analogue electrical output socket for a listening device, where the electrical output is ≤ 27 mV measured as described in EN 50332-2, while playing the fixed "programme simulation noise" as described in EN 50332-1. NOTE 1 Wherever the term acoustic output is used in this clause, the 30 s A-weighted equivalent sound pressure level $L_{Aeq,T}$ is meant. See also Zx.5 and Annex Zx. All other equipment shall: a) protect the user from unintentional acoustic outputs exceeding those mentioned above; and b) have a standard acoustic output level not exceeding those mentioned above, and automatically return to an output level not exceeding those mentioned above when the power is switched off; and		N/A

Attachment No. 1			
SubClause	Difference + Test	Result - Remark	Verdict

IEC 60950-1, GROUP DIFFERENCES (CENELEC common modifications EN)			
Clause	Requirement + Test	Result - Remark	Verdict
	c) provide a means to actively inform the user of the increased sound pressure when the equipment is operated with an acoustic output exceeding those mentioned above. Any means used shall be acknowledged by the user before activating a mode of operation which allows for an acoustic output exceeding those mentioned above. The acknowledgement does not need to be repeated more than once every 20 h of cumulative listening time; and NOTE 2 Examples of means include visual or audible signals. Action from the user is always required. NOTE 3 The 20 h listening time is the accumulative listening time, independent how often and how long the personal music player has been switched off. d) have a warning as specified in Zx.3; and e) not exceed the following: 1) equipment provided as a package (player with Its listening device), the acoustic output shall be ≤ 100 dBA measured while playing the fixed “programme simulation noise” described in EN 50332-1; and 2) a personal music player provided with an analogue electrical output socket for a listening device, the electrical output shall be ≤ 150 mV measured as described in EN 50332-2, while playing the fixed “programme simulation noise” described in EN 50332-1. For music where the average sound pressure (long term $L_{Aeq,T}$) measured over the duration of the song is lower than the average produced by the programme simulation noise, the warning does not need to be given as long as the average sound pressure of the song is below the basic limit of 85 dBA. In this case T becomes the duration of the song. NOTE 4 Classical music typically has an average sound pressure (long term $L_{Aeq,T}$) which is much lower than the average programme simulation noise. Therefore, if the player is capable to analyse the song and compare it with the programme simulation noise, the warning does not need to be given as long as the average sound pressure of the song is below the basic limit of 85 dBA. For example, if the player is set with the programme simulation noise to 85 dBA, but the average music level of the song is only 65 dBA, there is no need to give a warning or ask an acknowledgement as long as the average sound level of the song is not above the basic limit of 85 dBA.		N/A

Attachment No. 1			
SubClause	Difference + Test	Result - Remark	Verdict

IEC 60950-1, GROUP DIFFERENCES (CENELEC common modifications EN)			
Clause	Requirement + Test	Result - Remark	Verdict
	Zx.3 Warning The warning shall be placed on the equipment, or on the packaging, or in the instruction manual and shall consist of the following: the symbol of Figure 1 with a minimum height of 5 mm; and the following wording, or similar: "To prevent possible hearing damage, do not listen at high volume levels for long periods." **Figure 1 – Warning label (IEC 60417-6044)** Alternatively, the entire warning may be given through the equipment display during use, when the user is asked to acknowledge activation of the higher level.		N/A
	Zx.4 Requirements for listening devices (headphones and earphones)		N/A
	Zx.4.1 Wired listening devices with analogue input With 94 dBA sound pressure output $L_{Aeq,T}$, the input voltage of the fixed "programme simulation noise" described in EN 50332-2 shall be ≥ 75 mV. This requirement is applicable in any mode where the headphones can operate (active or passive), including any available setting (for example built-in volume level control). NOTE The values of 94 dBA – 75 mV correspond with 85dBA – 27 mV and 100 dBA – 150 mV.		N/A

Attachment No. 1			
SubClause	Difference + Test	Result - Remark	Verdict

IEC 60950-1, GROUP DIFFERENCES (CENELEC common modifications EN)			
Clause	Requirement + Test	Result - Remark	Verdict
	Zx.4.2 Wired listening devices with digital input With any playing device playing the fixed "programme simulation noise" described in EN 50332-1 (and respecting the digital interface standards, where a digital interface standard exists that specifies the equivalent acoustic level), the acoustic output $L_{Aeq,T}$ of the listening device shall be ≤ 100 dBA. This requirement is applicable in any mode where the headphones can operate, including any available setting (for example built-in volume level control, additional sound feature like equalization, etc.). NOTE An example of a wired listening device with digital input is a USB headphone.		N/A
	Zx.4.3 Wireless listening devices In wireless mode: with any playing and transmitting device playing the fixed programme simulation noise described in EN 50332-1; and respecting the wireless transmission standards, where an air interface standard exists that specifies the equivalent acoustic level; and with volume and sound settings in the listening device (for example built-in volume level control, additional sound feature like equalization, etc.) set to the combination of positions that maximize the measured acoustic output for the abovementioned programme simulation noise, the acoustic output $L_{Aeq,T}$ of the listening device shall be ≤ 100 dBA. NOTE An example of a wireless listening device is a Bluetooth headphone.		N/A
	Zx.5 Measurement methods Measurements shall be made in accordance with EN 50332-1 or EN 50332-2 as applicable. Unless stated otherwise, the time interval T shall be 30 s. NOTE Test method for wireless equipment provided without listening device should be defined.		N/A

Attachment No. 1			
SubClause	Difference + Test	Result - Remark	Verdict

IEC 60950-1, GROUP DIFFERENCES (CENELEC common modifications EN)			
Clause	Requirement + Test	Result - Remark	Verdict
2.7.1	Replace the subclause as follows: Basic requirements To protect against excessive current, short-circuits and earth faults in PRIMARY CIRCUITS, protective devices shall be included either as integral parts of the equipment or as parts of the building installation, subject to the following, a), b) and c): a) except as detailed in b) and c), protective devices necessary to comply with the requirements of 5.3 shall be included as parts of the equipment; b) for components in series with the mains input to the equipment such as the supply cord, appliance coupler, r.f.i. filter and switch, short-circuit and earth fault protection may be provided by protective devices in the building installation;		N/A
	c) it is permitted for PLUGGABLE EQUIPMENT TYPE B or PERMANENTLY CONNECTED EQUIPMENT, to rely on dedicated overcurrent and short-circuit protection in the building installation, provided that the means of protection, e.g. fuses or circuit breakers, is fully specified in the installation instructions. If reliance is placed on protection in the building installation, the installation instructions shall so state, except that for PLUGGABLE EQUIPMENT TYPE A the building installation shall be regarded as providing protection in accordance with the rating of the wall socket outlet.		N/A
2.7.2	This subclause has been declared ‘void’.		N/A
3.2.3	Delete the NOTE in Table 3A, and delete also in this table the conduit sizes in parentheses.		N/A

Attachment No. 1			
SubClause	Difference + Test	Result - Remark	Verdict

IEC 60950-1, GROUP DIFFERENCES (CENELEC common modifications EN)			
Clause	Requirement + Test	Result - Remark	Verdict
3.2.5.1	Replace "60245 IEC 53" by "H05 RR-F"; "60227 IEC 52" by "H03 VV-F or H03 VVH2-F"; "60227 IEC 53" by "H05 VV-F or H05 VVH2-F2". In Table 3B, replace the first four lines by the following: Up to and including 6 | 0,75 [a)] | Over 6 up to and including 10| (0,75) [b)] 1,0 | Over 10 up to and including 16| (1,0) [c)] 1,5 | In the conditions applicable to Table 3B delete the words "in some countries" in condition [a)]. In NOTE 1, applicable to Table 3B, delete the second sentence.		N/A
3.2.5.1 (A2:2013)	NOTE Z1 The harmonised code designations corresponding to the IEC cord types are given in Annex ZD		N/A
3.3.4	In Table 3D, delete the fourth line: conductor sizes for 10 to 13 A, and replace with the following: Over 10 up to and including 16 | 1,5 to 2,5 | 1,5 to 4 | Delete the fifth line: conductor sizes for 13 to 16 A		N/A
4.3.13.6 (A1:2010)	Replace the existing NOTE by the following: NOTE Z1 Attention is drawn to: 1999/519/EC: Council Recommendation on the limitation of exposure of the general public to electromagnetic fields 0 Hz to 300 GHz, and 2006/25/EC: Directive on the minimum health and safety requirements regarding the exposure of workers to risks arising from physical agents (artifical optical radiation).		N/A
	Standards taking into account mentioned Recommendation and Directive which demonstrate compliance with the applicable EU Directive are indicated in the OJEC.		N/A
Annex H	Replace the last paragraph of this annex by: At any point 10 cm from the surface of the OPERATOR ACCESS AREA, the dose rate shall not exceed 1 µSv/h (0,1 mR/h) (see NOTE). Account is taken of the background level. Replace the notes as follows: NOTE These values appear in Directive 96/29/Euratom. Delete NOTE 2.		N/A

Attachment No. 1			
SubClause	Difference + Test	Result - Remark	Verdict

IEC 60950-1, GROUP DIFFERENCES (CENELEC common modifications EN)			
Clause	Requirement + Test	Result - Remark	Verdict
Bibliography	Additional EN standards.		—

ZA	**NORMATIVE REFERENCES TO INTERNATIONAL PUBLICATIONS WITH THEIR CORRESPONDING EUROPEAN PUBLICATIONS**	—

ZB ANNEX (normative) **SPECIAL NATIONAL CONDITIONS (EN)**			
Clause	Requirement + Test	Result - Remark	Verdict
1.2.4.1	In **Denmark**, certain types of Class I appliances (see 3.2.1.1) may be provided with a plug not establishing earthing conditions when inserted into Danish socket-outlets.		N/A
1.2.13.14 (A11:2009)	In **Norway** and **Sweden**, for requirements see 1.7.2.1 and 7.3 of this annex.		N/A
1.5.7.1 (A11:2009)	In **Finland, Norway** and **Sweden**, resistors bridging BASIC INSULATION in CLASS I PLUGGABLE EQUIPMENT TYPE A must comply with the requirements in 1.5.7.1. In addition when a single resistor is used, the resistor must withstand the resistor test in 1.5.7.2.		N/A
1.5.8	In **Norway**, due to the IT power system used (see annex V, Figure V.7), capacitors are required to be rated for the applicable line-to-line voltage (230 V).		N/A
1.5.9.4	In **Finland**, **Norway** and **Sweden**, the third dashed sentence is applicable only to equipment as defined in 6.1.2.2 of this annex.		N/A

Attachment No. 1			
SubClause	Difference + Test	Result - Remark	Verdict

ZB ANNEX (normative) SPECIAL NATIONAL CONDITIONS (EN)			
Clause	Requirement + Test	Result - Remark	Verdict
1.7.2.1	In **Finland**, **Norway** and **Sweden**, CLASS I PLUGGABLE EQUIPMENT TYPE A intended for connection to other equipment or a network shall, if safety relies on connection to protective earth or if surge suppressors are connected between the network terminals and accessible parts, have a marking stating that the equipment must be connected to an earthed mains socket-outlet. The marking text in the applicable countries shall be as follows: In **Finland**: "Laite on liitettävä suojakoskettimilla varustettuun pistorasiaan" In **Norway**: “Apparatet må tilkoples jordet stikkontakt” In **Sweden**: “Apparaten skall anslutas till jordat uttag”		N/A
1.7.2.1 (A11:2009)	In **Norway** and **Sweden**, the screen of the cable distribution system is normally not earthed at the entrance of the building and there is normally no equipotential bonding system within the building. Therefore the protective earthing of the building installation need to be isolated from the screen of a cable distribution system. It is however accepted to provide the insulation external to the equipment by an adapter or an interconnection cable with galvanic isolator, which may be provided by e.g. a retailer. The user manual shall then have the following or similar information in Norwegian and Swedish language respectively, depending on in what country the equipment is intended to be used in: “Equipment connected to the protective earthing of the building installation through the mains connection or through other equipment with a connection to protective earthing – and to a cable distribution system using coaxial cable, may in some circumstances create a fire hazard. Connection to a cable distribution system has therefore to be provided through a device providing electrical isolation below a certain frequency range (galvanic isolator, see EN 60728-11).”		

Attachment No. 1			
SubClause	Difference + Test	Result - Remark	Verdict

ZB ANNEX (normative) SPECIAL NATIONAL CONDITIONS (EN)			
Clause	Requirement + Test	Result - Remark	Verdict
	NOTE In Norway, due to regulation for installations of cable distribution systems, and in Sweden, a galvanic isolator shall provide electrical insulation below 5 MHz. The insulation shall withstand a dielectric strength of 1,5 kV r.m.s., 50 Hz or 60 Hz, for 1 min. Translation to Norwegian (the Swedish text will also be accepted in Norway): “Utstyr som er koplet til beskyttelsesjord via nettplugg og/eller via annet jordtilkoplet utstyr – og er tilkoplet et kabel-TV nett, kan forårsake brannfare. For å unngå dette skal det ved tilkopling av utstyret til kabel-TV nettet installeres en galvanisk isolator mellom utstyret og kabel- TV nettet.” Translation to Swedish: ”Utrustning som är kopplad till skyddsjord via jordat vägguttag och/eller via annan utrustning och samtidigt är kopplad till kabel-TV nät kan i vissa fall medföra risk för brand. För att undvika detta skall vid anslutning av utrustningen till kabel-TV nät galvanisk isolator finnas mellan utrustningen och kabel-TV nätet.”		N/A
1.7.2.1 (A2:2013)	In **Denmark**, CLASS I PLUGGABLE EQUIPMENT TYPE A intended for connection to other equipment or a network shall, if safety relies on connection to protective earth or if surge suppressors are connected between the network terminals and accessible parts, have a marking stating that the equipment must be connected to an earthed mains socket-outlet. The marking text in **Denmark** shall be as follows: In **Denmark**: “Apparatets stikprop skal tilsluttes en stikkontakt med jord, som giver forbindelse til stikproppens jord.”		N/A
1.7.5 1.7.5 (A11:2009)	In **Denmark**, socket-outlets for providing power to other equipment shall be in accordance with the Heavy Current Regulations, Section 107-2-D1, Standard Sheet DK 1-3a, DK 1-5a or DK 1-7a, when used on Class I equipment. For STATIONARY EQUIPMENT the socket-outlet shall be in accordance with Standard Sheet DK 1-1b or DK 1-5a. For **CLASS II EQUIPMENT** the socket outlet shall be in accordance with Standard Sheet DKA 1-4a.		N/A

Attachment No. 1			
SubClause	Difference + Test	Result - Remark	Verdict

ZB ANNEX (normative) SPECIAL NATIONAL CONDITIONS (EN)			
Clause	Requirement + Test	Result - Remark	Verdict
1.7.5 (A2:2013)	In **Denmark**, socket-outlets for providing power to other equipment shall be in accordance with the DS 60884-2-D1:2011. For class I equipment the following Standard Sheets are applicable: DK 1-3a, DK 1-1c, DK 1-1d, DK 1-5a or DK 1-7a, with the exception for STATIONARY EQUIPMENT where the socket-outlets shall be in accordance with Standard Sheet DK 1-1b, DK 1-1c, DK 1-1d or DK 1-5a. Socket outlets intended for providing power to Class II apparatus with a rated current of 2,5 A shall be in accordance with DS 60884-2-D1 standard sheet DKA 1-4a. Other current rating socket outlets shall be in compliance with by DS 60884-2-D1 Standard Sheet DKA 1-3a or DKA 1-3b. Justification the Heavy Current Regulations, 6c		N/A
2.2.4	In **Norway**, for requirements see 1.7.2.1, 6.1.2.1 and 6.1.2.2 of this annex.		N/A
2.3.2	In **Finland**, **Norway** and **Sweden** there are additional requirements for the insulation. See 6.1.2.1 and 6.1.2.2 of this annex.		N/A
2.3.4	In **Norway**, for requirements see 1.7.2.1, 6.1.2.1 and 6.1.2.2 of this annex.		N/A
2.6.3.3	In the **United Kingdom**, the current rating of the circuit shall be taken as 13 A, not 16 A.		N/A
2.7.1	In the **United Kingdom**, to protect against excessive currents and short-circuits in the PRIMARY CIRCUIT of DIRECT PLUG-IN EQUIPMENT, tests according to 5.3 shall be conducted, using an external protective device rated 30 A or 32 A. If these tests fail, suitable protective devices shall be included as integral parts of the DIRECT PLUG-IN EQUIPMENT, so that the requirements of 5.3 are met.		N/A
2.10.5.13	In **Finland**, **Norway** and **Sweden**, there are additional requirements for the insulation, see 6.1.2.1 and 6.1.2.2 of this annex.		N/A

Attachment No. 1			
SubClause	Difference + Test	Result - Remark	Verdict

ZB ANNEX (normative) SPECIAL NATIONAL CONDITIONS (EN)			
Clause	Requirement + Test	Result - Remark	Verdict
3.2.1.1	In **Switzerland**, supply cords of equipment having a RATED CURRENT not exceeding 10 A shall be provided with a plug complying with SEV 1011 or IEC 60884-1 and one of the following dimension sheets: SEV 6532-2.1991 Plug Type 15 3P+N+PE 250/400 V, 10 A SEV 6533-2.1991 Plug Type 11 L+N 250 V, 10 A SEV 6534-2.1991 Plug Type 12 L+N+PE 250 V, 10 A In general, EN 60309 applies for plugs for currents exceeding 10 A. However, a 16 A plug and socket-outlet system is being introduced in Switzerland, the plugs of which are according to the following dimension sheets, published in February 1998: SEV 5932-2.1998: Plug Type 25 , 3L+N+PE 230/400 V, 16 A SEV 5933-2.1998:Plug Type 21, L+N, 250 V, 16A SEV 5934-2.1998: Plug Type 23, L+N+PE 250 V, 16 A		N/A
3.2.1.1	In **Denmark**, supply cords of single-phase equipment having a rated current not exceeding13 A shall be provided with a plug according to the Heavy Current Regulations, Section 107-2-D1. CLASS I EQUIPMENT provided with socket-outlets with earth contacts or which are intended to be used in locations where protection against indirect contact is required according to the wiring rules shall be provided with a plug in accordance with standard sheet DK 2-1a or DK 2-5a. If poly-phase equipment and single-phase equipment having a RATED CURRENT exceeding 13 A is provided with a supply cord with a plug, this plug shall be in accordance with the Heavy Current Regulations, Section 107-2-D1 or EN 60309-2.		N/A

Attachment No. 1			
SubClause	Difference + Test	Result - Remark	Verdict

ZB ANNEX (normative) SPECIAL NATIONAL CONDITIONS (EN)			
Clause	Requirement + Test	Result - Remark	Verdict
3.2.1.1 (A2:2013)	In **Denmark**, supply cords of single-phase equipment having a rated current not exceeding 13 A shall be provided with a plug according to DS 60884-2-D1. CLASS I EQUIPMENT provided with socket-outlets with earth contacts or which are intended to be used in locations where protection against indirect contact is required according to the wiring rules shall be provided with a plug in accordance with standard sheet DK 2-1a or DK 2-5a. If a single-phase equipment having a RATED CURRENT exceeding 13 A or if a poly-phase equipment is provided with a supply cord with a plug, this plug shall be in accordance with the standard sheets DK 6-1a in DS 60884-2-D1 or EN 60309-2. Justification the Heavy Current Regulations, 6c		N/A
3.2.1.1	In **Spain**, supply cords of single-phase equipment having a rated current not exceeding 10 A shall be provided with a plug according to UNE 20315:1994. Supply cords of single-phase equipment having a rated current not exceeding 2,5 A shall be provided with a plug according to UNE-EN 50075:1993. CLASS I EQUIPMENT provided with socket-outlets with earth contacts or which are intended to be used in locations where protection against indirect contact is required according to the wiring rules, shall be provided with a plug in accordance with standard UNE 20315:1994. If poly-phase equipment is provided with a supply cord with a plug, this plug shall be in accordance with UNE-EN 60309-2.		N/A

Attachment No. 1			
SubClause	Difference + Test	Result - Remark	Verdict

ZB ANNEX (normative) SPECIAL NATIONAL CONDITIONS (EN)			
Clause	Requirement + Test	Result - Remark	Verdict
3.2.1.1	In the **United Kingdom**, apparatus which is fitted with a flexible cable or cord and is designed to be connected to a mains socket conforming to BS 1363 by means of that flexible cable or cord and plug, shall be fitted with a 'standard plug' in accordance with Statutory Instrument 1768:1994 - The Plugs and Sockets etc. (Safety) Regulations 1994, unless exempted by those regulations. NOTE 'Standard plug' is defined in SI 1768:1994 and essentially means an approved plug conforming to BS 1363 or an approved conversion plug.		N/A
3.2.1.1	In **Ireland**, apparatus which is fitted with a flexible cable or cord and is designed to be connected to a mains socket conforming to I.S. 411 by means of that flexible cable or cord and plug, shall be fitted with a 13 A plug in accordance with Statutory Instrument 525:1997 - National Standards Authority of Ireland (section 28) (13 A Plugs and Conversion Adaptors for Domestic Use) Regulations 1997.		N/A
3.2.4	In **Switzerland**, for requirements see 3.2.1.1 of this annex.		N/A
3.2.5.1	In the **United Kingdom**, a power supply cord with conductor of 1,25 mm2 is allowed for equipment with a rated current over 10 A and up to and including 13 A.		N/A
3.3.4	In the **United Kingdom**, the range of conductor sizes of flexible cords to be accepted by terminals for equipment with a RATED CURRENT of over 10 A up to and including 13 A is: • 1,25 mm^2 to 1,5 mm^2 nominal cross-sectional area.		N/A

Attachment No. 1			
SubClause	Difference + Test	Result - Remark	Verdict

ZB ANNEX (normative) SPECIAL NATIONAL CONDITIONS (EN)			
Clause	Requirement + Test	Result - Remark	Verdict
4.3.6	In the **United Kingdom**, the torque test is performed using a socket outlet complying with BS 1363 part 1:1995, including Amendment 1:1997 and Amendment 2:2003 and the plug part of DIRECT PLUG-IN EQUIPMENT shall be assessed to BS 1363: Part 1, 12.1, 12.2, 12.3, 12.9, 12.11, 12.12, 12.13, 12.16 and 12.17, except that the test of 12.17 is performed at not less than 125 °C. Where the metal earth pin is replaced by an Insulated Shutter Opening Device (ISOD), the requirements of clauses 22.2 and 23 also apply.		N/A
4.3.6	In **Ireland**, DIRECT PLUG-IN EQUIPMENT is known as plug similar devices. Such devices shall comply with Statutory Instrument 526:1997 - National Standards Authority of Ireland (Section 28) (Electrical plugs, plug similar devices and sockets for domestic use) Regulations, 1997.		N/A
5.1.7.1	In **Finland**, **Norway** and **Sweden** TOUCH CURRENT measurement results exceeding 3,5 mA r.m.s. are permitted only for the following equipment: • STATIONARY PLUGGABLE EQUIPMENT TYPE A that is intended to be used in a RESTRICTED ACCESS LOCATION where equipotential bonding has been applied, for example, in a telecommunication centre; and has provision for a permanently connected PROTECTIVE EARTHING CONDUCTOR; and is provided with instructions for the installation of that conductor by a SERVICE PERSON; • STATIONARY PLUGGABLE EQUIPMENT TYPE B; • STATIONARY PERMANENTLY CONNECTED EQUIPMENT.		N/A

Attachment No. 1			
SubClause	Difference + Test	Result - Remark	Verdict

ZB ANNEX (normative) SPECIAL NATIONAL CONDITIONS (EN)			
Clause	Requirement + Test	Result - Remark	Verdict
6.1.2.1 (A1:2010)	In **Finland**, **Norway** and **Sweden**, add the following text between the first and second paragraph of the compliance clause: If this insulation is solid, including insulation forming part of a component, it shall at least consist of either - two layers of thin sheet material, each of which shall pass the electric strength test below, or - one layer having a distance through insulation of at least 0,4 mm, which shall pass the electric strength test below. Alternatively for components, there is no distance through insulation requirements for the insulation consisting of an insulating compound completely filling the casing, so that CLEARANCES and CREEPAGE DISTANCES do not exist, if the component passes the electric strength test in accordance with the compliance clause below and in addition - passes the tests and inspection criteria of 2.10.11 with an electric strength test of 1,5 kV multiplied by 1,6 (the electric strength test of 2.10.10 shall be performed using 1,5 kV), and - is subject to ROUTINE TESTING for electric strength during manufacturing, using a test voltage of 1,5 kV.		N/A

Attachment No. 1			
SubClause	Difference + Test	Result - Remark	Verdict

ZB ANNEX (normative) SPECIAL NATIONAL CONDITIONS (EN)			
Clause	Requirement + Test	Result - Remark	Verdict
	It is permitted to bridge this insulation with an optocoupler complying with 2.10.5.4 b). It is permitted to bridge this insulation with a capacitor complying with EN 60384-14:2005, subclass Y2. A capacitor classified Y3 according to EN 60384-14:2005, may bridge this insulation under the following conditions: - the insulation requirements are satisfied by having a capacitor classified Y3 as defined by EN 60384-14, which in addition to the Y3 testing, is tested with an impulse test of 2,5 kV defined in EN 60950-1:2006, 6.2.2.1; - the additional testing shall be performed on all the test specimens as described in EN 60384-14: - the impulse test of 2,5 kV is to be performed before the endurance test in EN 60384-14, in the sequence of tests as described in EN 60384-14.		N/A
6.1.2.2	In **Finland**, **Norway** and **Sweden**, the exclusions are applicable for PERMANENTLY CONNECTED EQUIPMENT, PLUGGABLE EQUIPMENT TYPE B and equipment intended to be used in a RESTRICTED ACCESS LOCATION where equipotential bonding has been applied, e.g. in a telecommunication centre, and which has provision for a permanently connected PROTECTIVE EARTHING CONDUCTOR and is provided with instructions for the installation of that conductor by a SERVICE PERSON.		N/A
7.2	In **Finland**, **Norway** and **Sweden**, for requirements see 6.1.2.1 and 6.1.2.2 of this annex. The term TELECOMMUNICATION NETWORK in 6.1.2 being replaced by the term CABLE DISTRIBUTION SYSTEM.		N/A
7.3 (A11:2009)	In **Norway** and **Sweden**, for requirements see 1.2.13.14 and 1.7.2.1 of this annex.		N/A

Attachment No. 1			
SubClause	Difference + Test	Result - Remark	Verdict

Annex ZD
(informative)

IEC and CENELEC code designations for flexible cords

Type of flexible cord	Code designations	
	IEC	CENELEC
PVC insulated cords		
Flat twin tinsel cord	60227 IEC 41	H03VH-Y
Light polyvinyl chloride sheathed flexible cord	60227 IEC 52	H03VV-F H03VVH2-F
Ordinary polyvinyl chloride sheathed flexible cord	60277 IEC 53	H05VV-F H05VVH2-F
Rubber insulated cords		
Braided cord	60245 IEC 51	H03RT-F
Ordinary tough rubber sheathed flexible cord	60245 IEC 53	H05RR-F
Ordinary polychloroprene sheathed flexible cord	60245 IEC 57	H05RN-F
Heavy polychloroprene sheathed flexible cord	60245 IEC 66	H07RN-F
Cords having high flexibility		
Rubber insulated and sheathed cord	60245 IEC 86	H03RR-H
Rubber insulated, crosslinked PVC sheathed cord	60245 IEC 87	H03RV4-H
Crosslinked PVC insulated and sheathed cord	60245 IEC 88	H03V4V4-H

Enclosures

Type	Supplement Id	Description
Marking Plate	13-01	Label
Photographs	3-01	Overall Views
Photographs	3-02	Connector View
Photographs	3-03	Internal Views
Photographs	3-04	Mainboard Views
Photographs	3-05	IO Board Views
Photographs	3-06	SENSOR Board Views
Diagrams	4-01	Enclosure dimensions drawing
Diagrams	4-02	Mounting Bracket spec
Diagrams	4-03	POE Transformer spec
Schematics + PWB		
Manuals	6-01	Mounting Installation Instruction
Miscellaneous		
Licenses		

Marking Plate ID 13-01

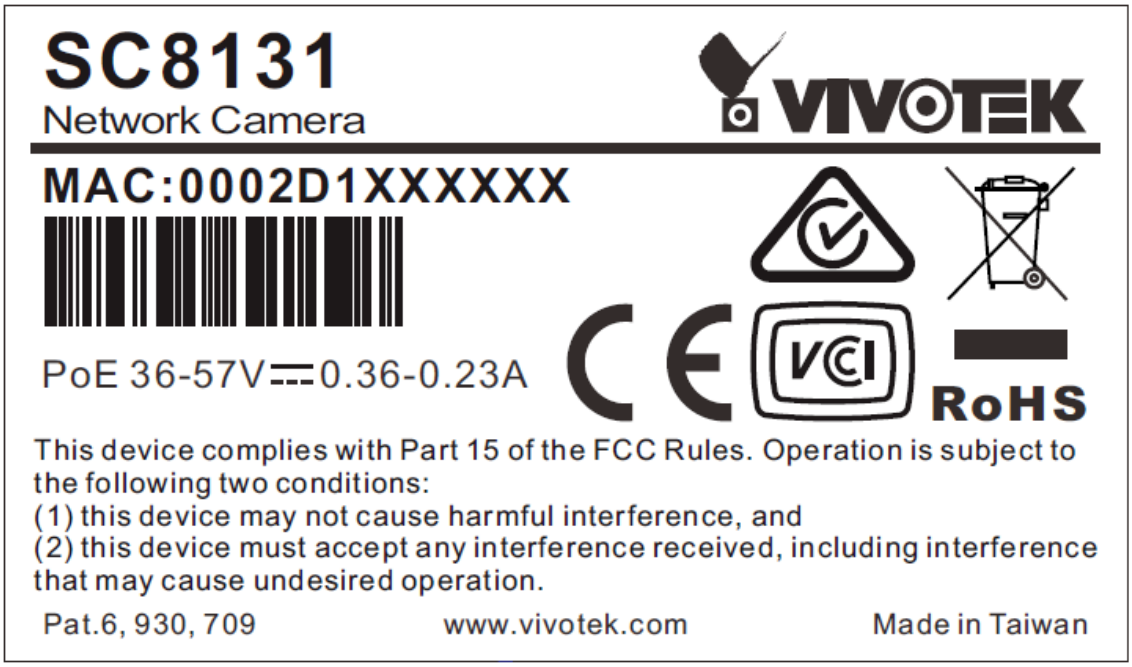

Photographs ID 3-01

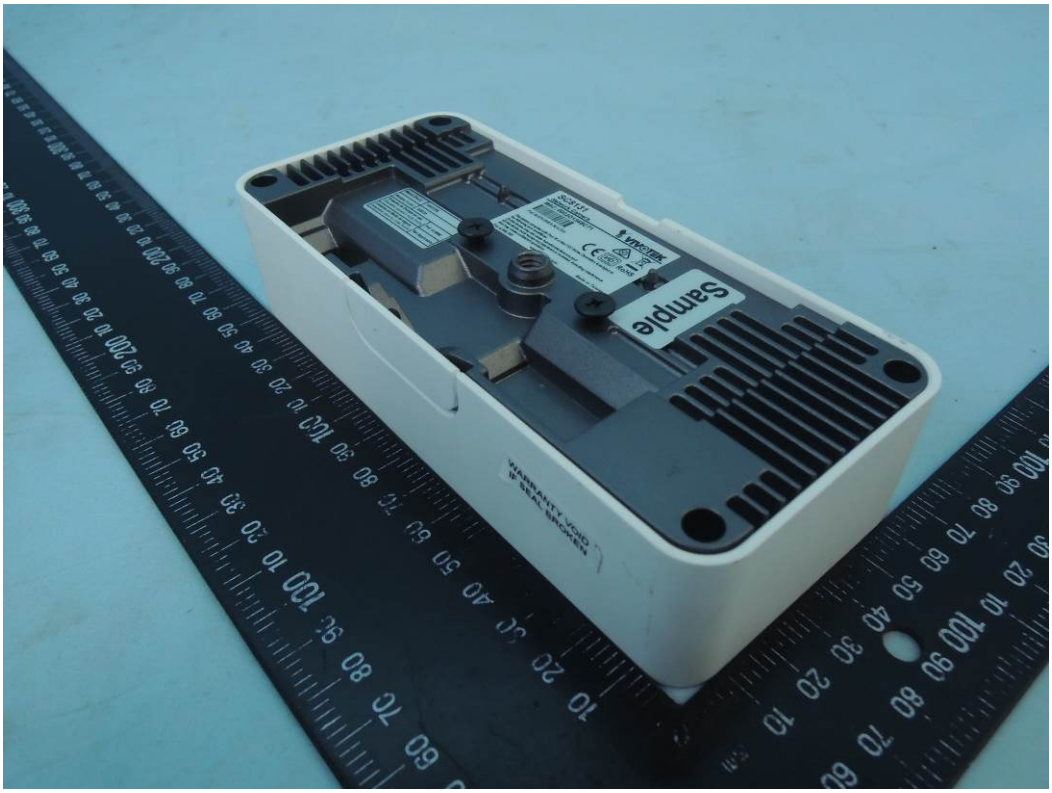

Photographs ID 3-02

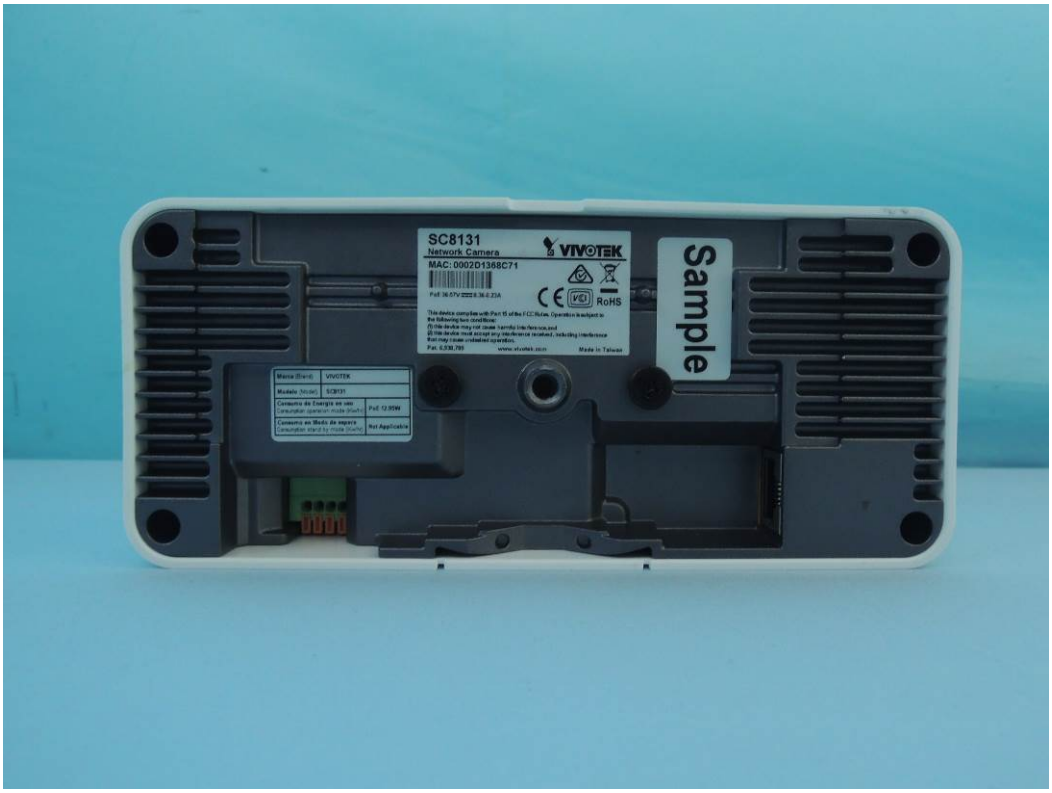

Photographs ID 3-03

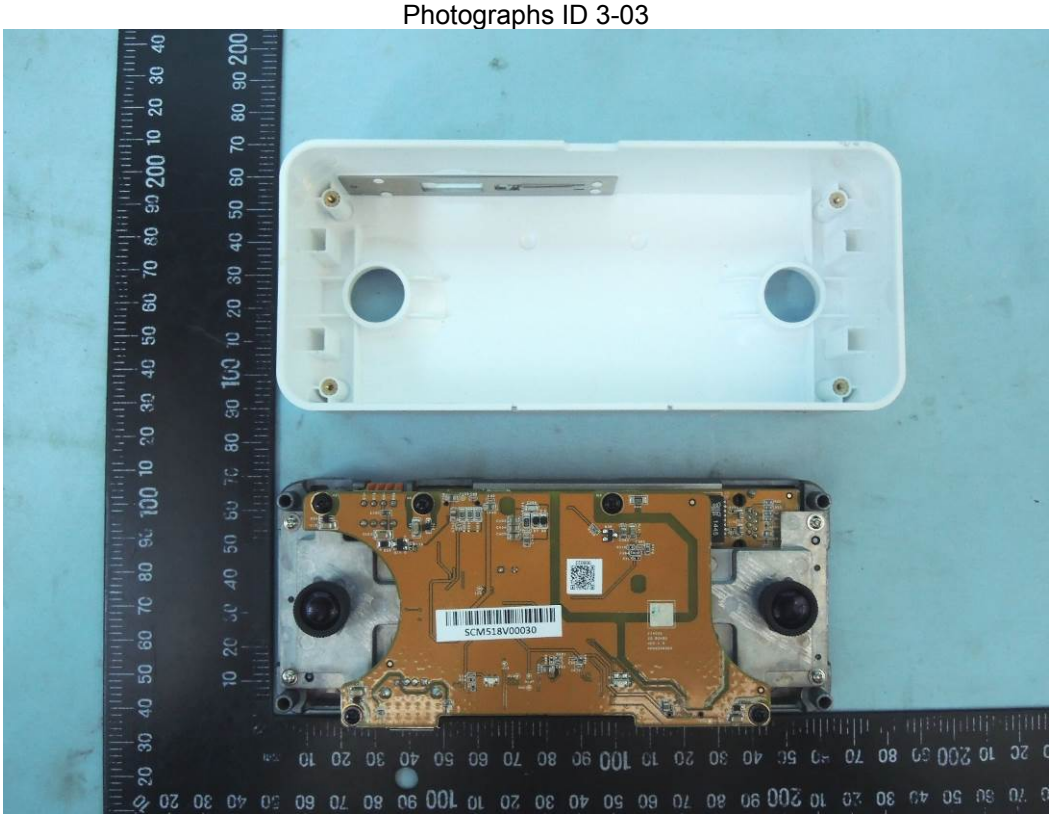

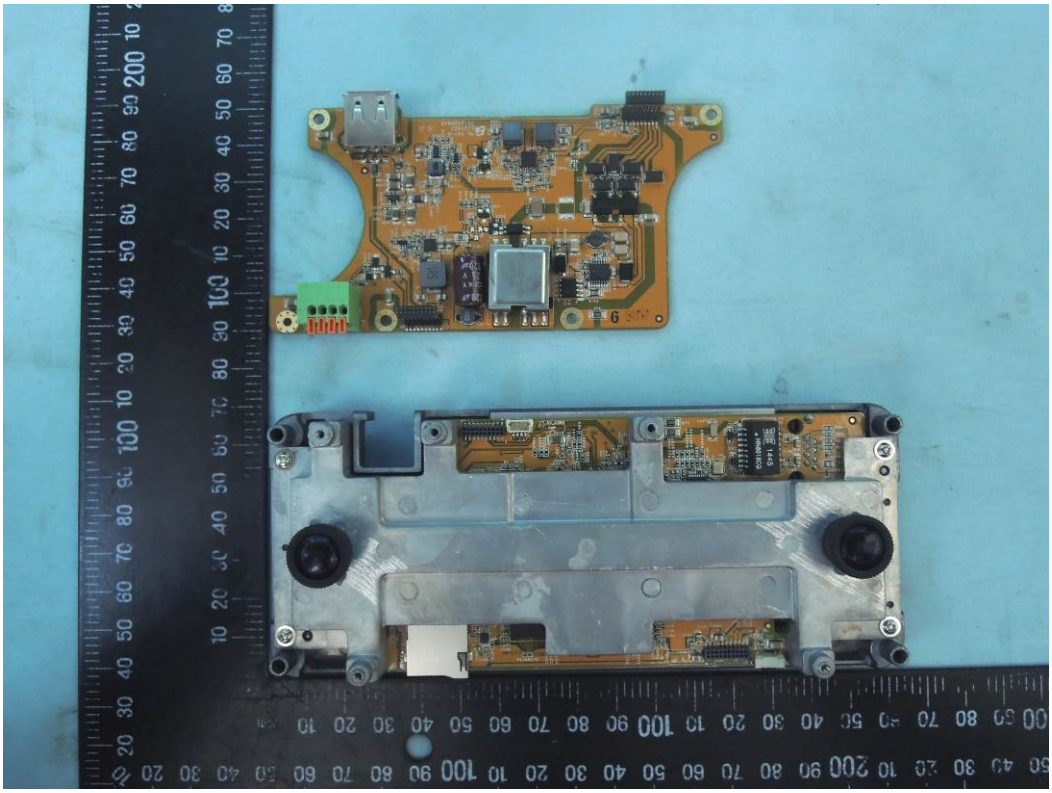

Photographs ID 3-03

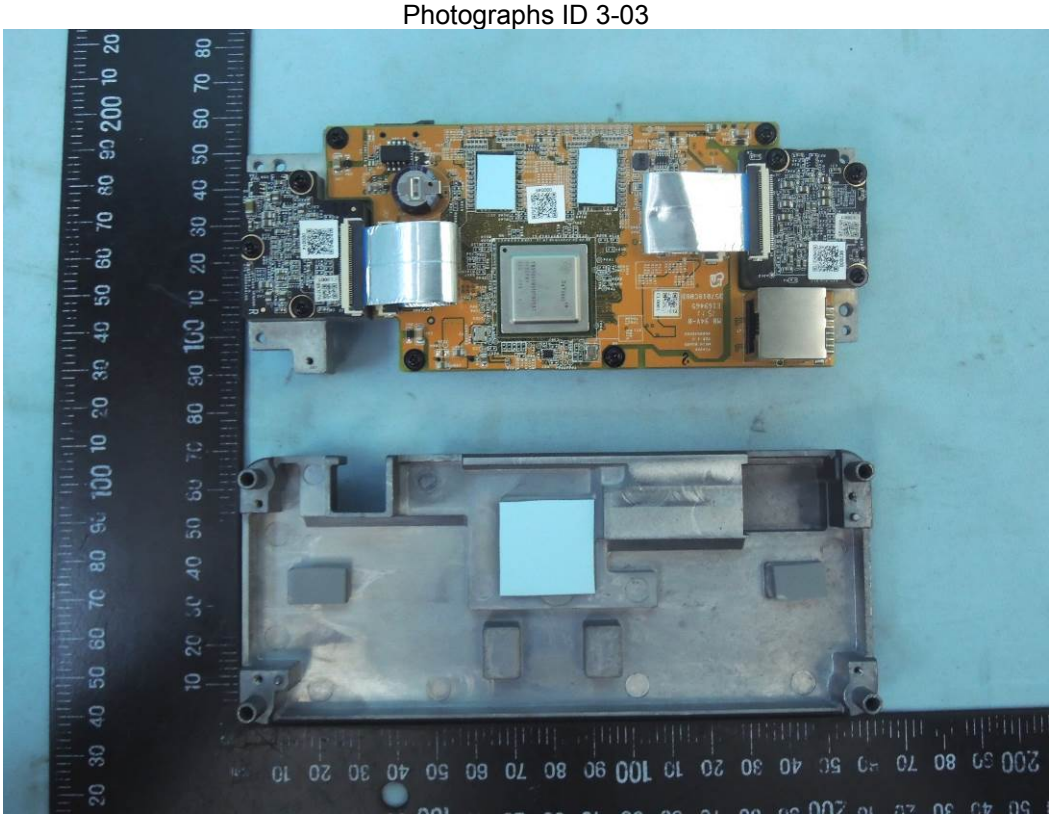

Photographs ID 3-04

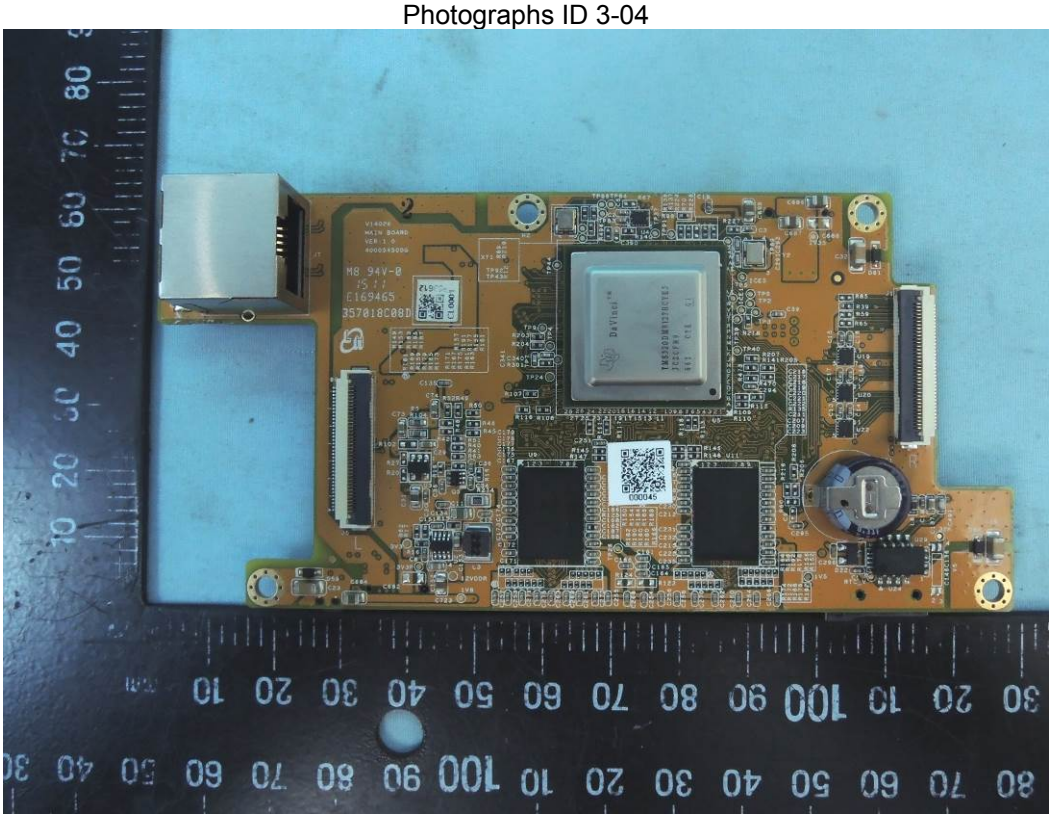

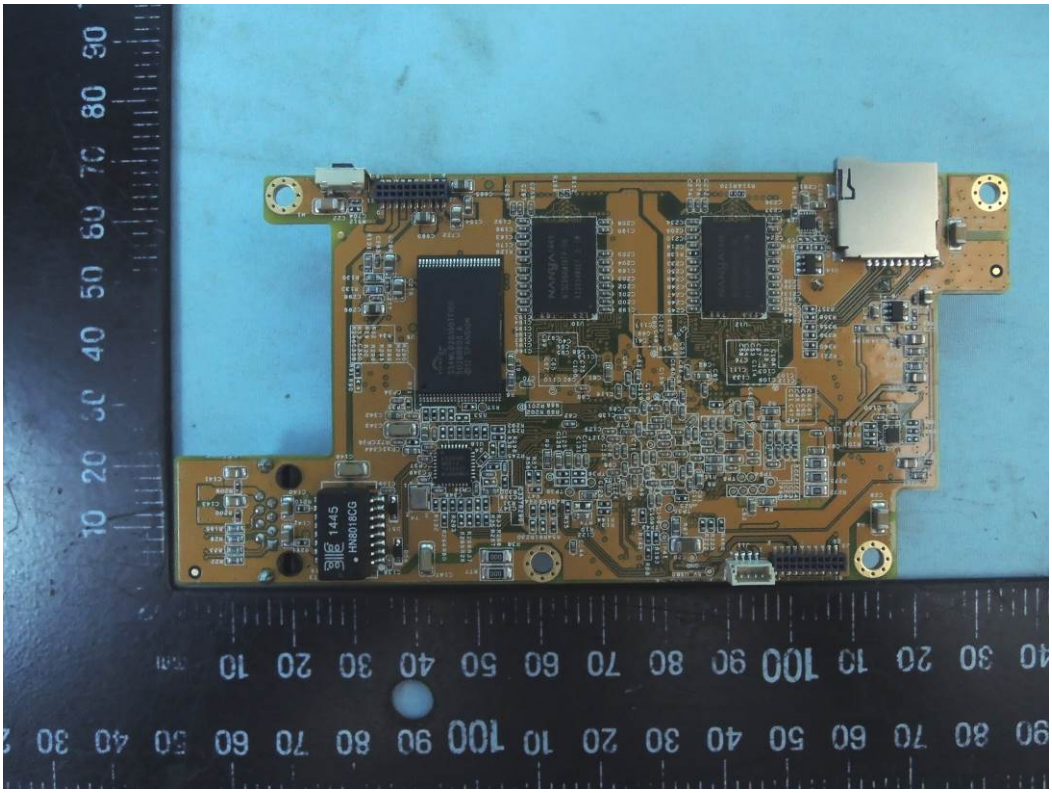

Photographs ID 3-05

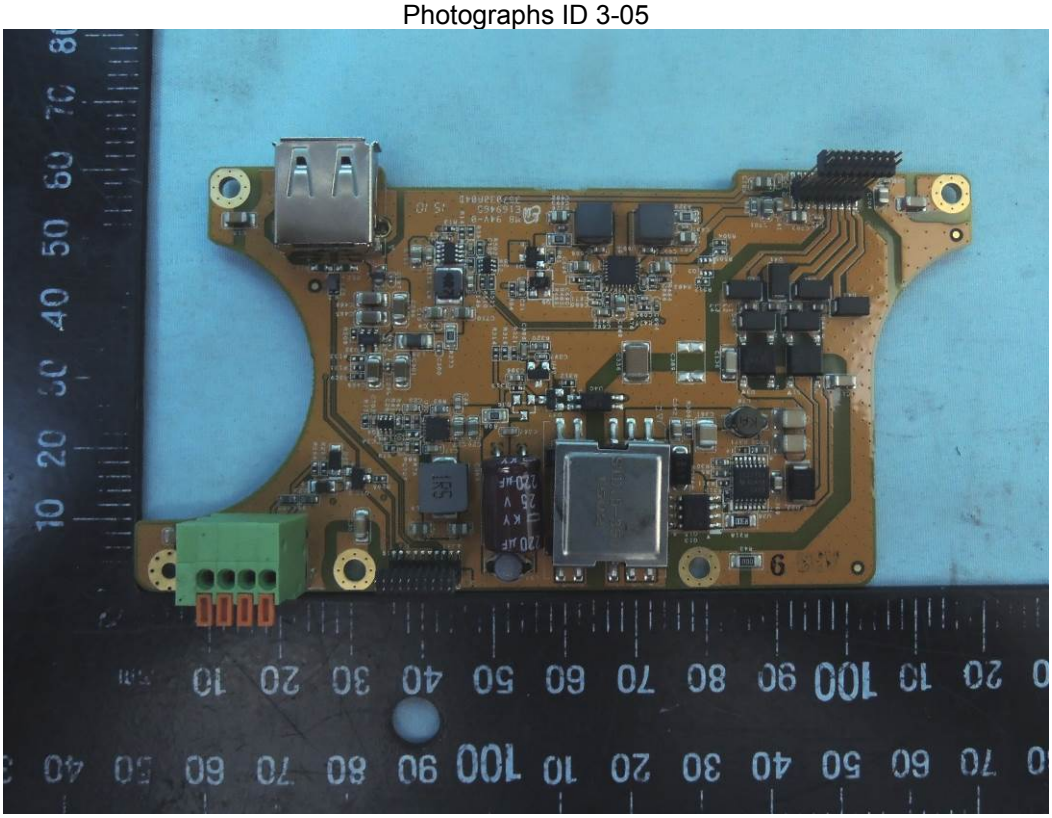

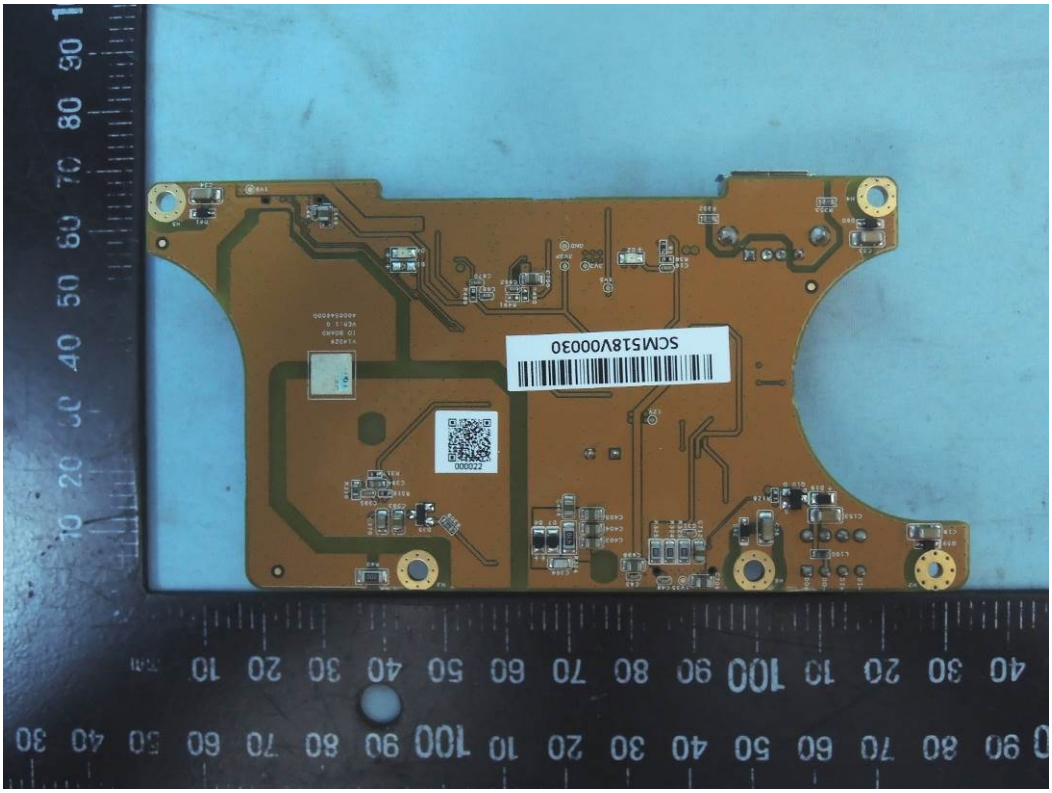

Photographs ID 3-06

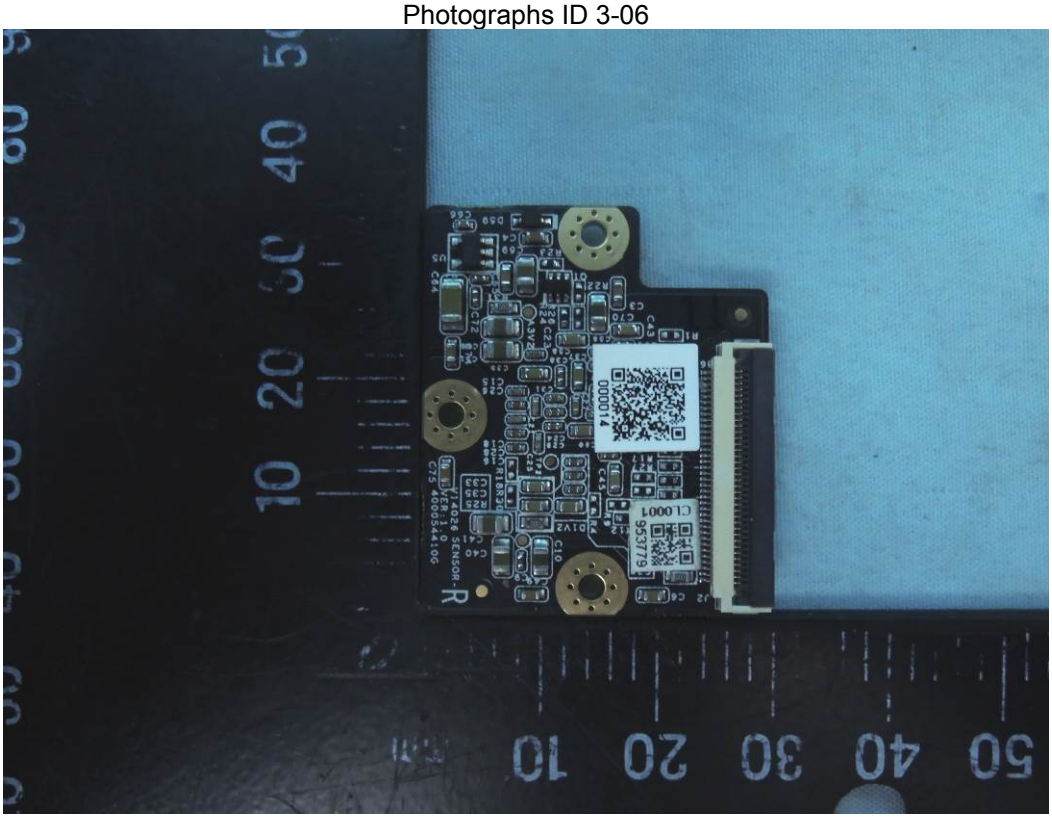

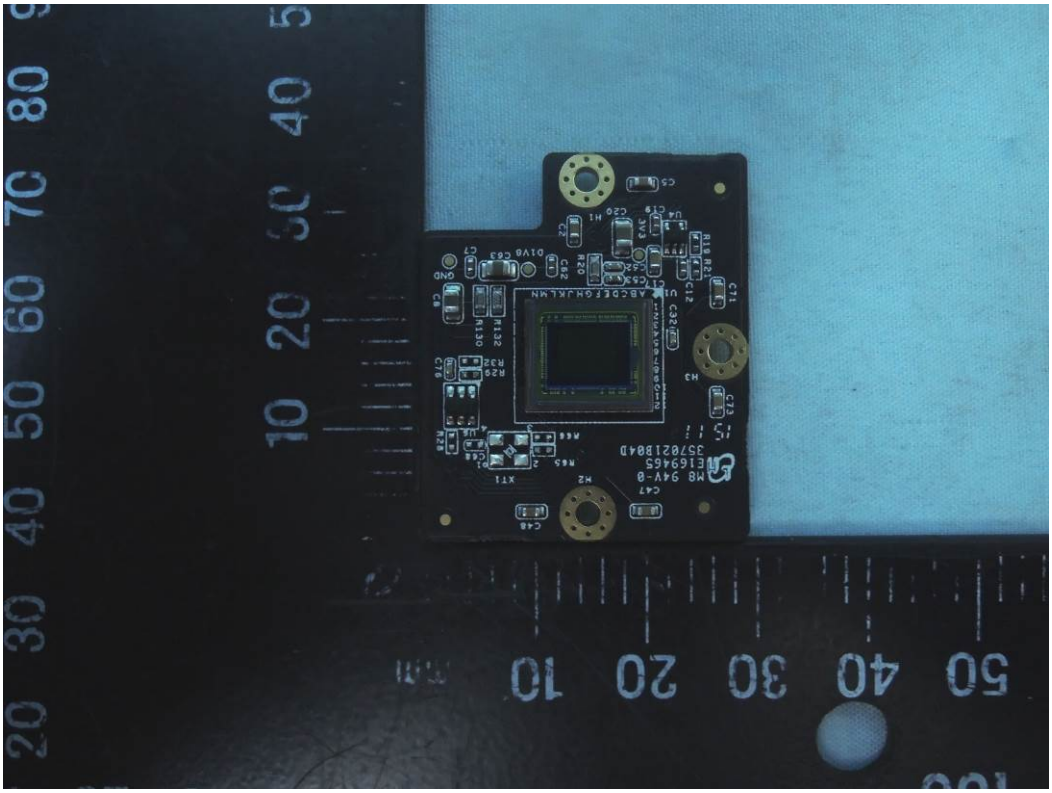

Photographs ID 3-07

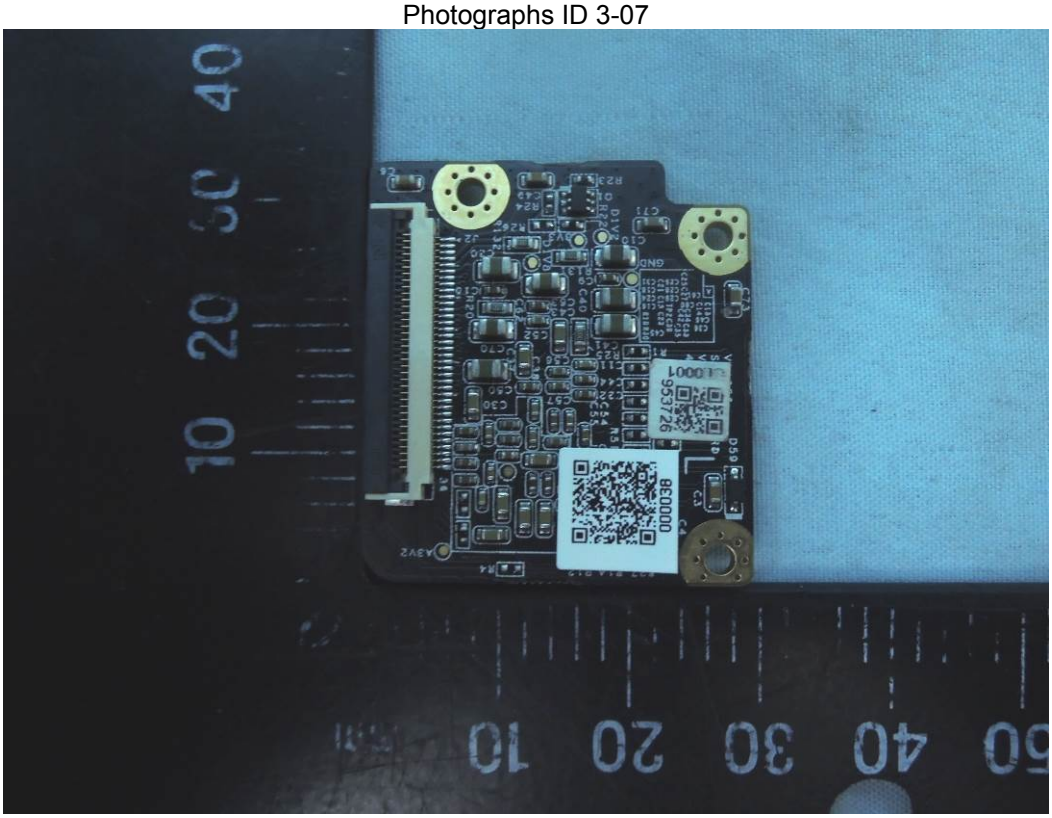

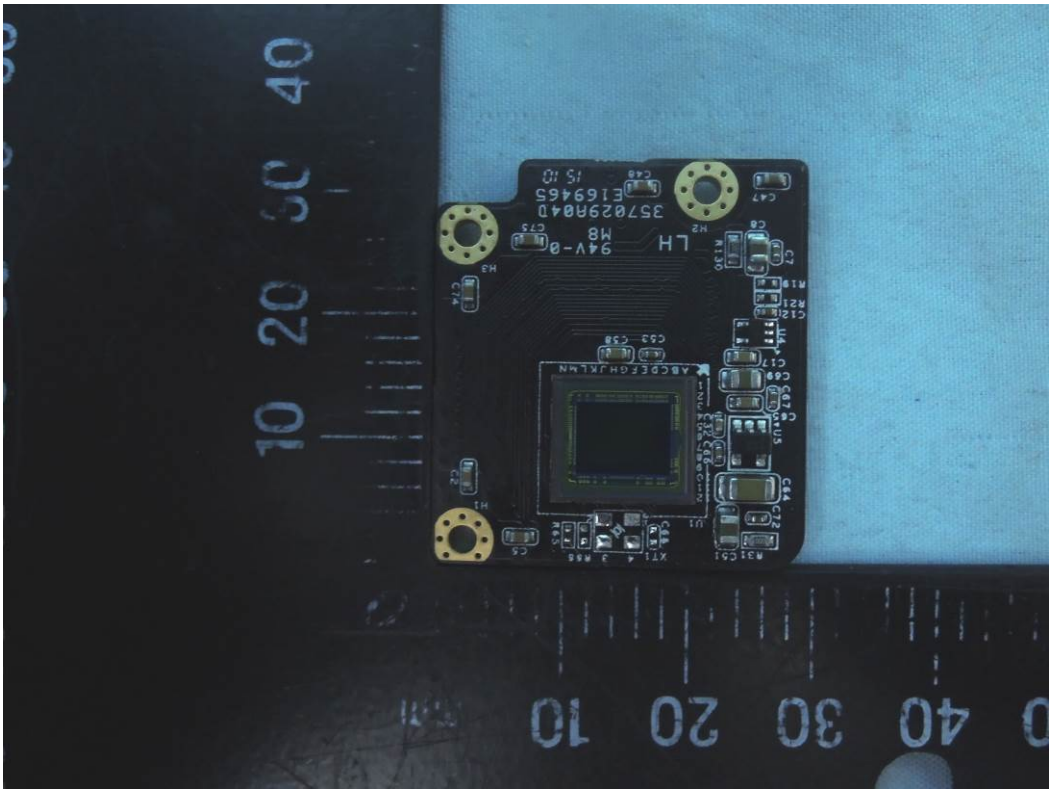

Diagrams ID 4-01

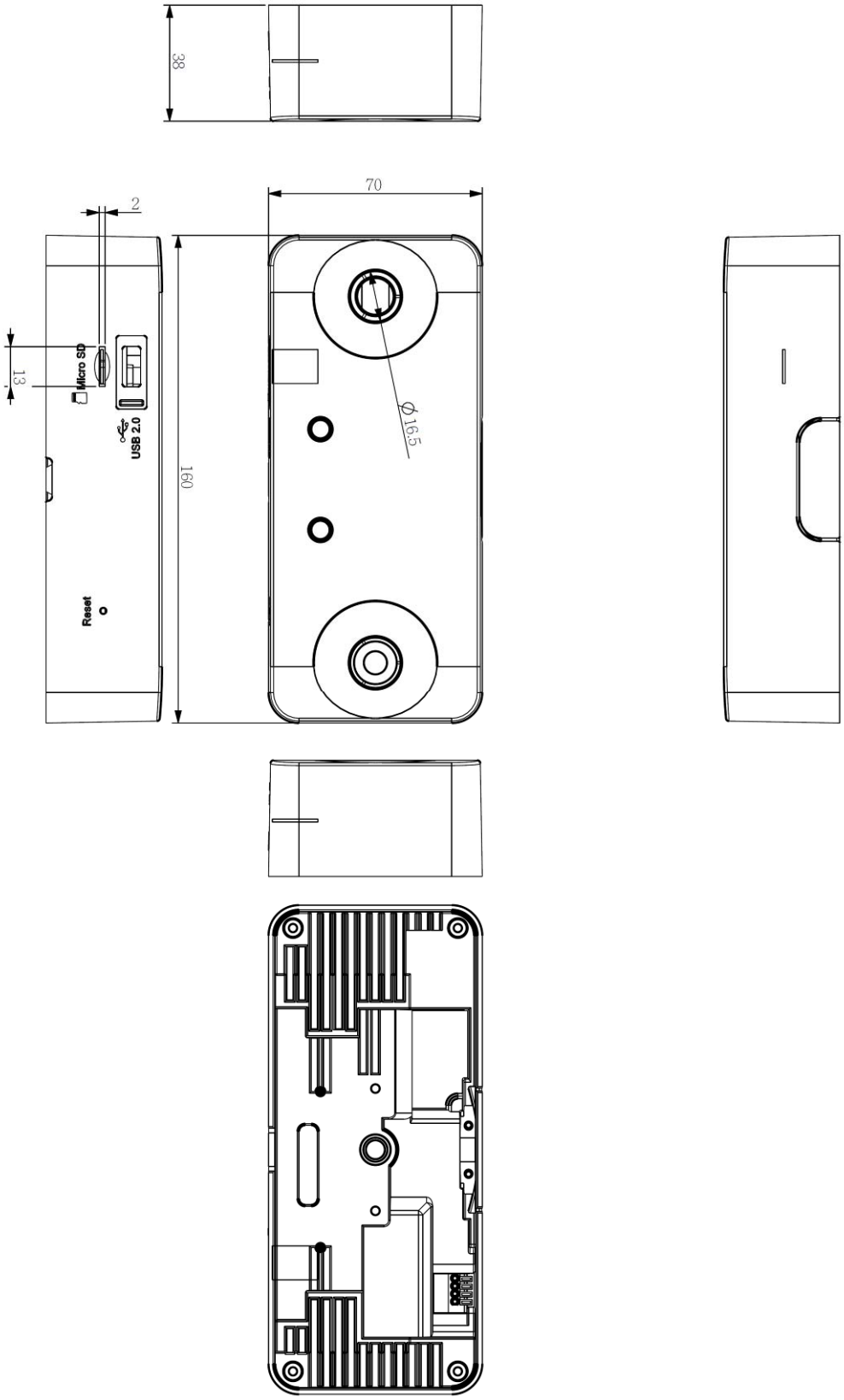

unit: mm

Diagrams ID 4-02

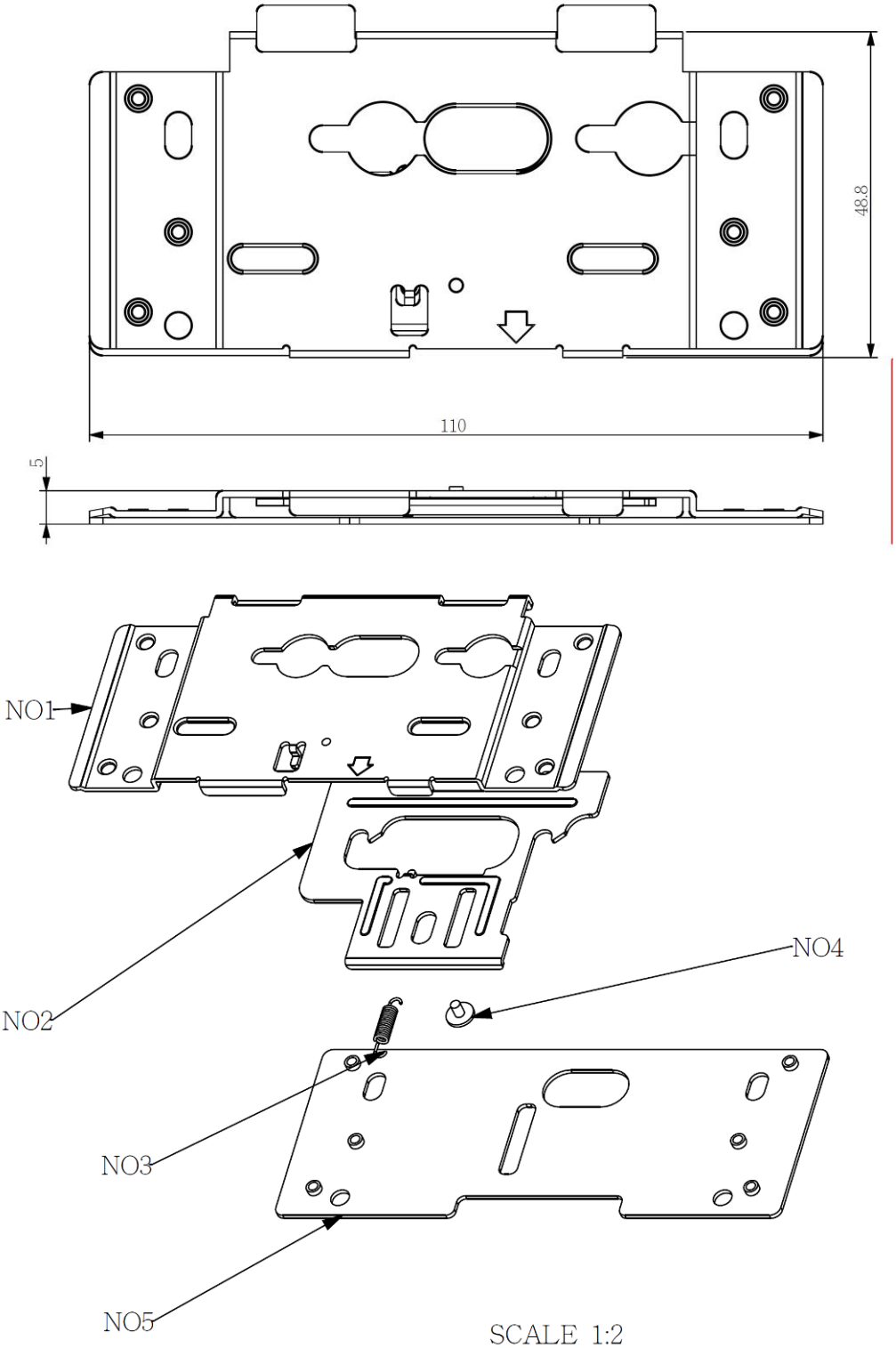

unit: mm

ATC 碩哲科技股份有限公司
ISO9001 ACROPARTS TECHNOLOGY CO.,LTD.

SPECIFICATION FOR APPROVAL

CUSTOMER：	晶睿通訊股份有限公司
CUSTOMER P/N：	350016200G
ATC P/N：	13W12V SW-FD15SH-5201-10035A
QUANTITY：	5 PCS
DATE：	2011.06.01

Please confirm your acceptance of this approval sheet by return fax.

☐ APPROVED

☐ REJECTED

RoHS 危害物質限用

DRAWN BY	CHECKED BY	APPROVED BY
林月霞 Alice	張德名 Richard	葉任銘 J.M.Yeh

Acroparts Technology Co., Ltd.
1F No.16 Tze Chiang St. Yangmei, Taoyuan, Taiwan
TEL：+886-3-4881133 FAX：+886-3-4881177

ATC 碩哲科技股份有限公司
ISO9001 ACROPARTS TECHNOLOGY CO.,LTD.

13W12V Series Specification

6 Configuration and Dimensions:

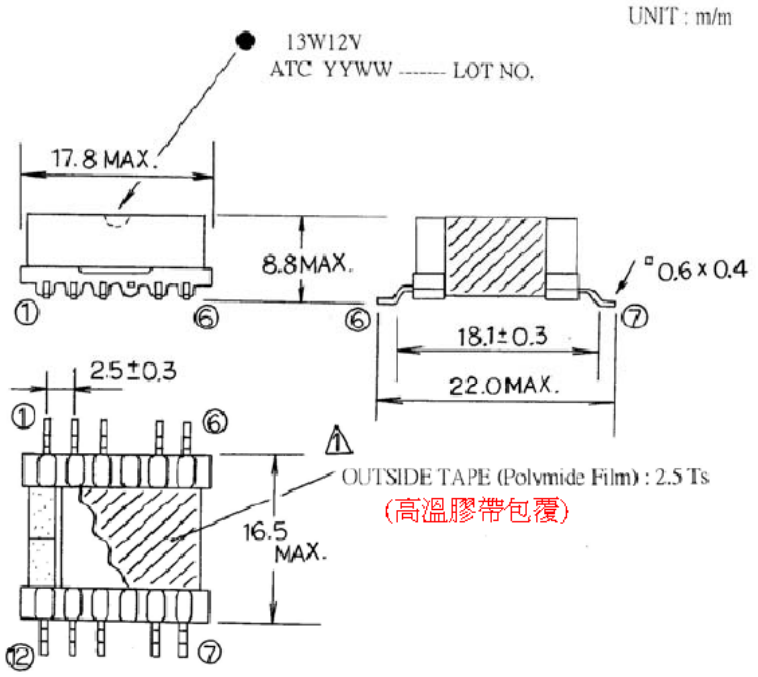

REMARKS:
1. PIN 4,9 CUT OFF.
2. LABEL ON TOP SIDE.
3. FIXING TAPE FOR CORE: 1 mil, 2 Ts MIN.
4. LOT NO.: YY WW
   - WW — WEEK
   - YY — YEAR

ATC 碩哲科技股份有限公司
ISO9001 ACROPARTS TECHNOLOGY CO.,LTD.

13W12V Series Specification

8 SCHEMATIC

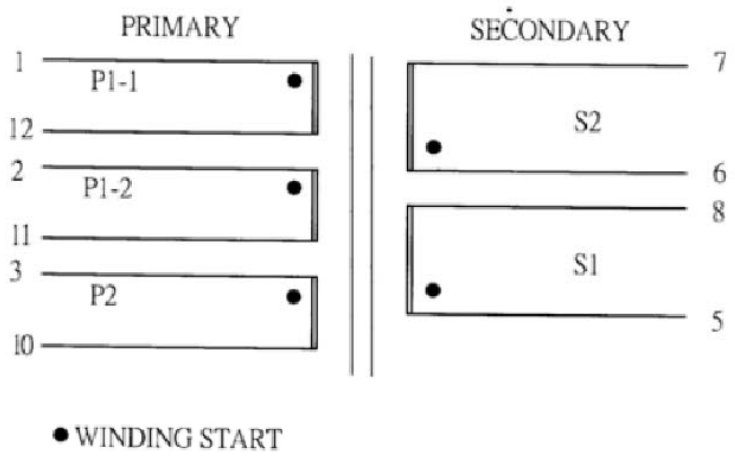

8 WINDING CONSTRUCTION

INSULATION TAPE: 1 mil x 9.0 m/m

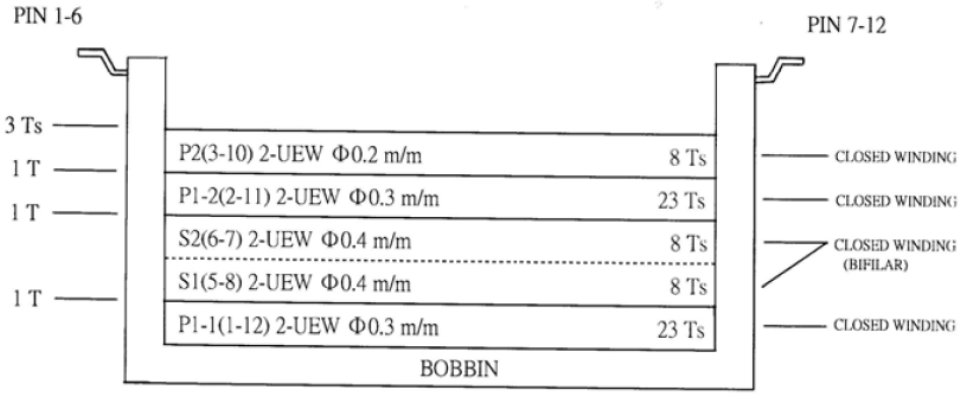

ATC 碩哲科技股份有限公司
ISO9001 ACROPARTS TECHNOLOGY CO.,LTD.

13W12V Series Specification

6 PART MATERIAL IDENTIFICATION :

PART MATERIAL IDENTIFICATION

NO.	ITEM	MATERIAL	CLASS	UL FILE NO.	MANUFACTURER
1.	CORE	FERRITE JPP-4			A-CORE ELECTRICAL CO., LTD.
		PC40, PC44			TDK CORPORATION
		NC-2H			NICERA CERAMIC CORPORATION
		P4			ACME ELECTRONICS CORPORATION
2.	BOBBIN	PHENOLIC PM-9820, PM-9630	150℃	E41429(M)	SUMITOMO BAKELITE CO., LTD.
		LCP E4008	130℃	E54705(M)	SUMITOMO CHEMICAL CO., LTD.
3.	TAPE	POLYESTER CAT.NO. 35660Y	130℃	E50292(S)	SYMBIO INC.
		⚠ CAT.NO. KA180	200℃		
		3M NO. 1350-1 or 56 or 1298	130℃	E17385(N)	MINNESOTA MINING & MFG CO ELECTRICAL SPECIALTIES DIV
		⚠ NO. 92	180℃		
		CAT NO. CT, PZ	130℃	E165111	JINGJIANG YAHUA PRESSURE SENSITIVE GLUE CO., LTD.
		⚠ CAT.NO. PF	180℃		
		CAT NO. 370S, 371F	130℃	E175868(S)	BONDTEC PACIFIC CO., LTD.
		⚠ CAT.NO. 911	200℃		
4.	WIRE	POLYURETHANE ENAMELLED COPPER DD-NYU	130℃	E84081(S)	PACIFIC ELECTRIC WIRE & CABLE CO., LTD.
		UEW-2	130℃	E174837	JUNG SHING WIRE CO., LTD.
		UEW	130℃	E152187	TA WIN INDUSTRIES(M) SDN BHD
		UEW	130℃	E223922(S)	HUNG CHENG INDUSTRY CO., LTD.
5.	SOLDER	LEAD FREE BAR Sn/Cu			THOUSAND ISLAND METAL FOIL CO., LTD. (or EQU.)
6.	VARNISH	BC-346A, BC-359	200℃	E317427	JOHN C DOLPH COMPANY.(or EQU.)
7.	LUG	TIN PLATED CP WIRE			OPTIONAL

承認書番号 Spec No. TTS-ASST00367

客戶
Customer 晶睿 殿

承 認 書
Specifications For Approval

製品名 Description	變壓器 Transformer
客戶品名 Customer P/N	POE13F-12L
仕様名 Trade Name	STD15-350

RoHS對應品

受領印欄
Please return one copy with your approved signature

作成 DRAWN	検認 CHECKED	品管検認 QC CHECKED	承認 APPROVED
江 2013/12/03 文娟	鮑 2013/12/03 静華	佐藤(正)	黄 2013/12/03 文李

AUDIX

発行日 Date: 2013年12月3日

信華科技(廈門)有限公司
AUDIX TECHNOLOGY (XIAMEN) Co.,LTD
中国廈門市集美区杏南路46号
46,XING NAN ROAD,JIMEI,XIAMEN,CHINA
TEL:(0086)0592-6216601 FAX:(0086)0592-6214837

Diagrams ID 4-04

承 認 書 Specifications	分類番号 Classified No.	TTS-ASST00367	2/3
品 名 TITLE	STD15-350		

電気特性 Electric Characterisrics

Part number	Power	Inductance at 0 A ±10%uH	Inductance at Ipk min(uH)	DCR max(Ω) pri	sec	bias	Leakage inductance max(uH)	Turns ratio pri : sec	pri : bias	Ipk (A)	Output (REF)
STD15-350	13	35	31.5	0.095	0.017	0.150	0.6	1:0.35	1:0.35	2.0	12V, 1.1A

1. 1500Vrms.one minute isolation primary and bias to secondary.
2. Inductance is for the primary, measured at 250kHz, 0.3Vrms.
3. Peak primary current drawn at minimum input voltage.
4. DCR for the primary and for the secondary are with the windings connected in parallel.
5. Leakage inductance is for the primary windings with the secondary windings shorted.
6. Turns ratios are with the primary the secondary windings connected in parallel.
7. Output of the secondary is with the windings connected in parallel. Bias winding output is 12V, 20mA.
8. Electrical specifications at 25℃.
9. Ambient temperature −40℃ to + 125℃.
10. Storage temperature −40℃ to + 125℃.
11. Packaging −40℃ to + 80℃.

外形、寸法 Externals and Dimensions

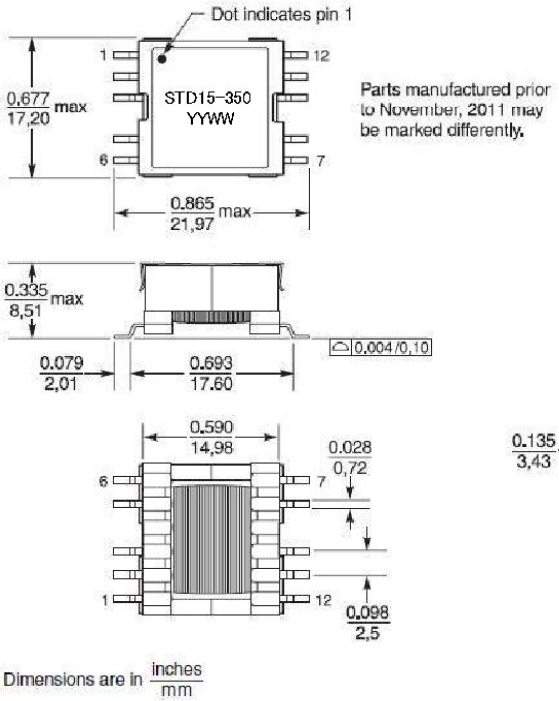

Schematics

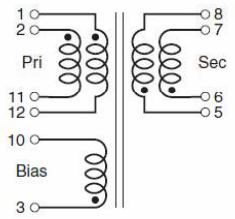

Primary windings and secondary windings to be connected in parallel on PC board.

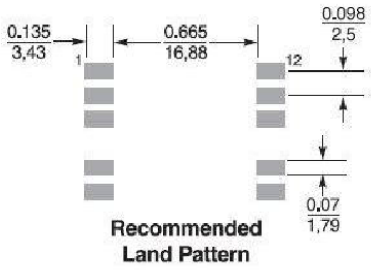

SINKA

TO: Issued :

1. Description : Transformer
2. Lot No. :
3. Trade Name : STD15-350
4. Quantity :

MATERIAL LIST

No.	Item	Trade name	Material	File No.	Temp Class	Manufacture
①	Core	P4 EFD15	Ferrite	----	----	ACME Electronics Material Co., Ltd.
		DMR40 EPC15	Ferrite	----	----	Hengdian Group Dmegc Magnetics Co., Ltd.
		TP4 EFD15	Ferrite	----	----	TDG Holding Co., Ltd.
②	Bobbin	EFD15	Phenolic	E41429 UL94V-0	150 ℃	Sumitomo Bakelite Co., Ltd.
③	Magnet Wire	UEW	Polyurethane Copper Wire	E174837	130 ℃	Jung Shing Wire Co., Ltd.
				E197768	130 ℃	Ta YA Electric Wire Factory
				E85640	130 ℃	TAI-1 Copper Co., Ltd.
				E221719	155 ℃	Zhejiang Hongbo Electric Line & Wire Co., Ltd.
④	Insulation Tape	201	Polyimide film	E229667	180 ℃	Shanghai Jinzhang Insulating Material Co., Ltd.
		CT	Polyester	E165111	130 ℃	Jingjiang Yahua Pressure Sensitive Glue Co., Ltd.
⑤	Holder	EFD15	Stainless Steel	----	----	Optional
⑥	Solder	Sn95-1Ag-4CU	Lead-Free	----	----	ALPHA Metal Co., Ltd.
		SN100C3	Lead-Free	----	----	AIM Solder Corporation
⑦	Adhesive		Epoxy	----	----	Optional

We certify that each material of above parts is properly employed such as above table.

AUDIX TECHNOLOGY (XIAMEN) Co.,LTD.

Read Before Use

The use of surveillance devices may be prohibited by law in your country. The Network Camera is not only a high-performance web-ready camera but can also be part of a flexible surveillance system. It is the user's responsibility to ensure that the operation of such devices is legal before installing this unit for its intended use.

It is important to first verify that all contents received are complete according to the Package Contents listed below. Take note of the warnings in the Quick Installation Guide before the Network Camera is installed; then carefully read and follow the instructions in the Installation chapter to avoid damage due to faulty assembly and installation. This also ensures the product is used properly as intended.

The Network Camera is a network device and its use should be straightforward for those who have basic networking knowledge. It is designed for various applications including video sharing, general security/surveillance, etc. The Configuration chapter suggests ways to best utilize the Network Camera and ensure proper operations. For creative and professional developers, the URL Commands of the Network Camera section serves as a helpful reference to customizing existing homepages or integrating with the current web server.

Package Contents

- SC8131
- Mounting plate
- Screw pack
- L-type Hex key wrench
- Software CD
- Quick Installation Guide
- Alignment sticker

Symbols and Statements in this Document

INFORMATION: provides important messages or advices that might help prevent inconvenient or problem situations.

NOTE: Notices provide guidance or advices that are related to the functional integrity of the machine.

Tips: Tips are useful information that helps enhance or facilitae an installation, function, or process.

WARNING: or IMPORTANT:: These statements indicate situations that can be dangerous or hazardous to the machine or you.

Electrical Hazard: This statement appears when high voltage electrical hazards might occur to an operator.

IMPORTANT:

Requirements for Running Stereo Tracking Video Analysis:

1. The estimated installation height ranges from 2.5 to 5 meters.
2. The embedded video tracking and counting analysis requires a monitoring session on Microsoft IE 10 or IE 11 browser.
3. Lens cleanliness is also required because dust spots or smears on dirty lens can produce miscalculation of pixels, correlation, and movements.
4. Avoid impacts to the lens modules. The relative positions of the lens have been carefully calibrated in factory. Even if the lens positions have slightly changed, optical parameters and stereo correlation will be affected, and then you should return the camera for a repair.
5. For other installation concerns, please refer to page 9, Considerations.
6. Avoid glass and reflective materials, such as aluminum foils, in the field of view. If unavoidable, you can use the Exclusive area settings to get rid of the side effects.
7. Make sure the camera is installed approriately above the area of your interest, e.g., an entrance to building. Also use a leveling tool to make sure the camera is mounted horizontally level.

Refer to page 118 for the configuration details about the embedded **Stereo Tracking** and **Counting** functionality.

NOTE:

- This camera is powered by a PoE switch or PoE injector. This equipment is to be connected only to PoE networks without routing the the outside plant.

Physical Description

Front Panel

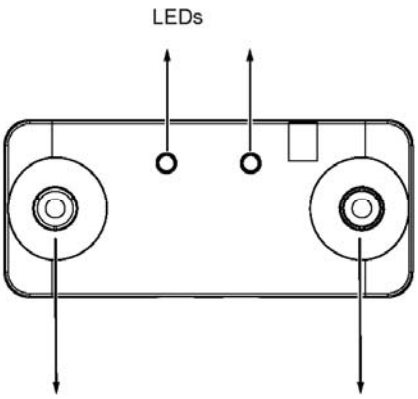

Rear Panel

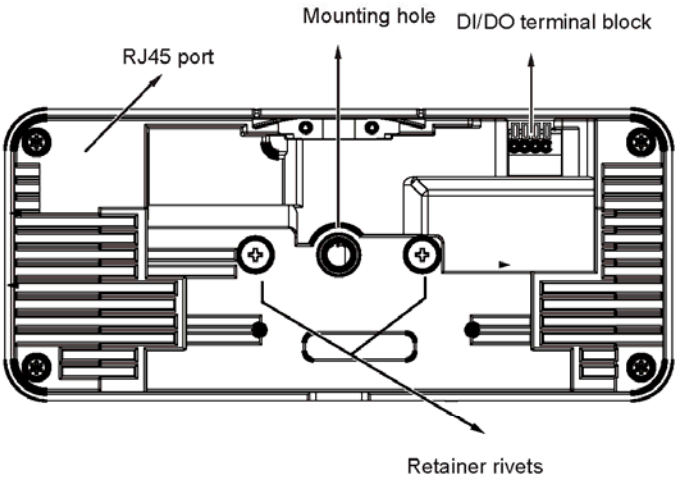

Top View

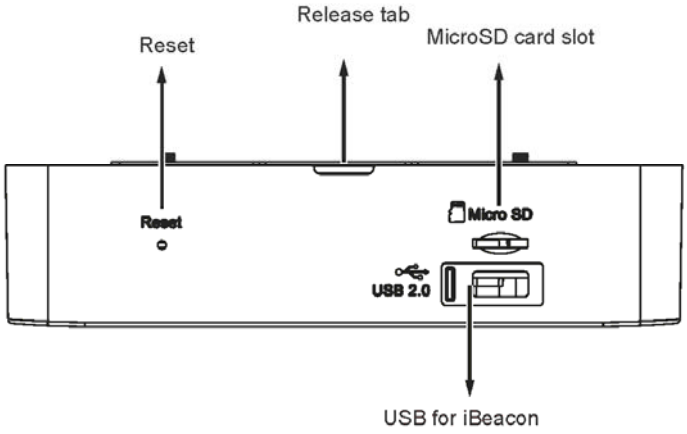

The USB port output is 5V, 2.42W

WARNING:

Please do not remove the protective sheet before the installation is done. Dirty lens can seriously affect the accuracy of video analysis.

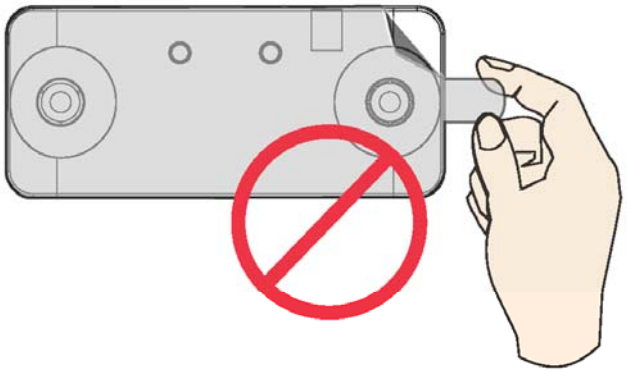

General I/O Terminal Block

This Network Camera provides a general I/O terminal block which is used to connect external input / output devices. The pin definitions are described below.

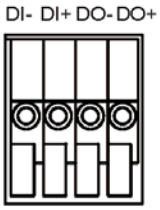

The maximum DO+ 12V output load is 0.5A.

DI/DO Diagram

Please refer to the following illustration for the connection method.

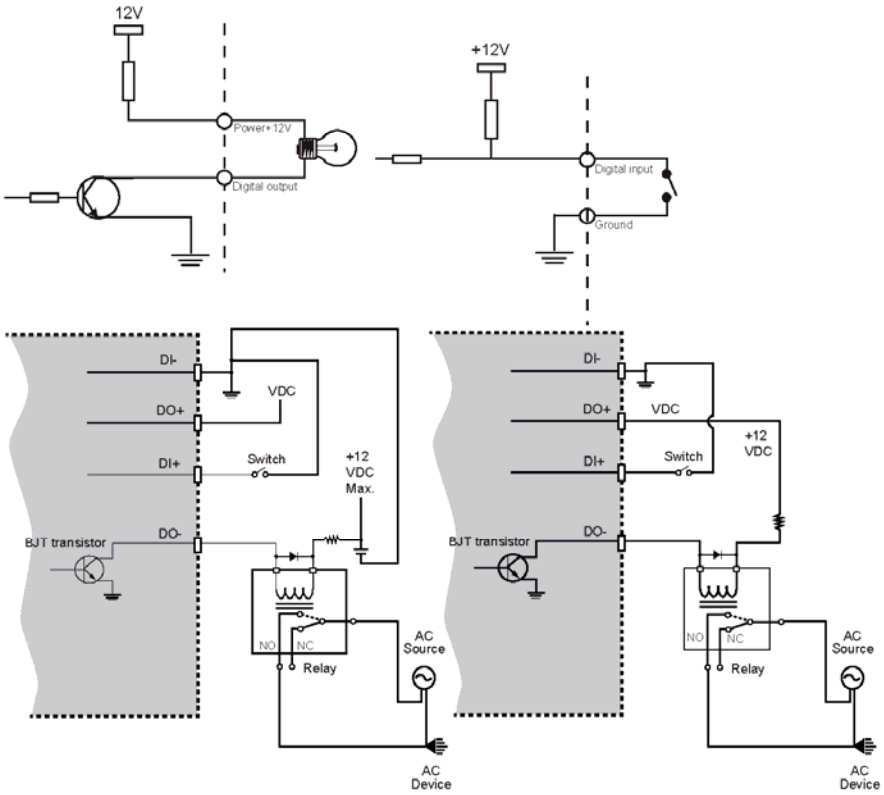

NOTE:

The maximum output load from DO pins is 50mA.

Hardware Reset

Recessed Reset Button

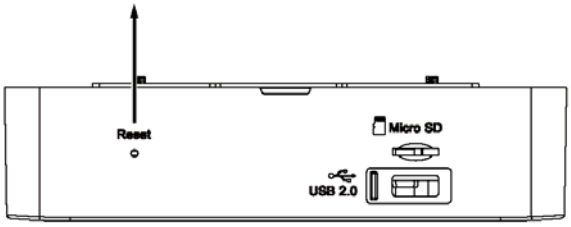

The reset button is used to reset the system or restore the factory default settings. Sometimes resetting the system can return the camera to normal operation. If the system problems remain after reset, restore the factory settings and install again.

Reset: Press and release the recessed reset button with a straightened paper clip. Wait for the Network Camera to reboot.

Restore: Press and hold the recessed reset button until the status LED rapidly blinks. Note that all settings will be restored to factory default. Upon successful restore, the status LED will blink green and red during normal operation.

Micro SD/SDHC/SDXC Card Capacity

This network camera is compliant with **Micro SD/SDHC/SDXC 16GB / 8GB / 32GB / 64GB** and other preceding standard SD cards.

Install the Camera

1. Jot down the camera's MAC address for later reference.

2. Plan the installation features, e.g., position and installation height.

Installation Option A: Using the Mounting Plate

A1. Attach the alignment sticker to a preferred position. If preferred, drill a cabling hole. See below for the diameters of it.

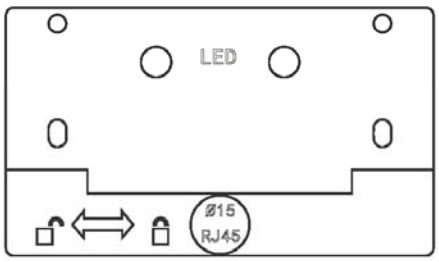

Ø15mm

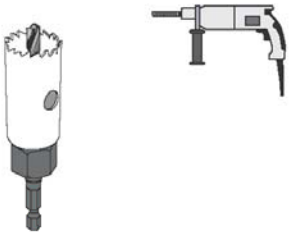

A2. Route an Ethernet cable through the cabling hole.

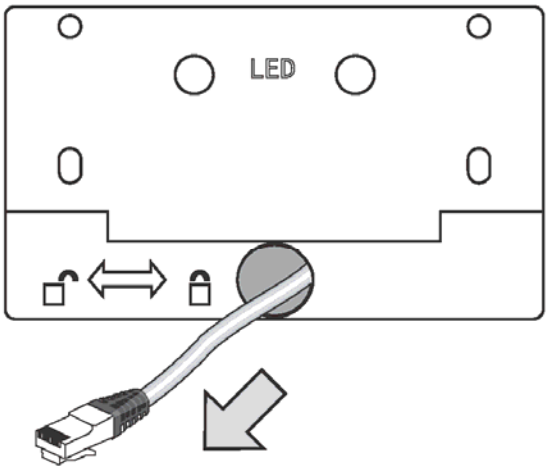

A3 A3. Drill mounting holes and hammer the included anchors into the mounting holes.

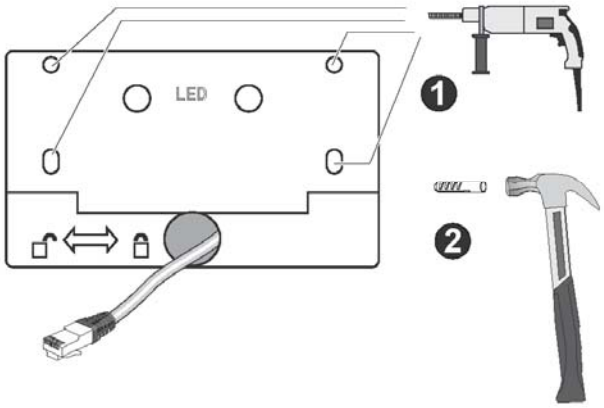

A4 A4. Secure the mounting plate to wall using the included screws.

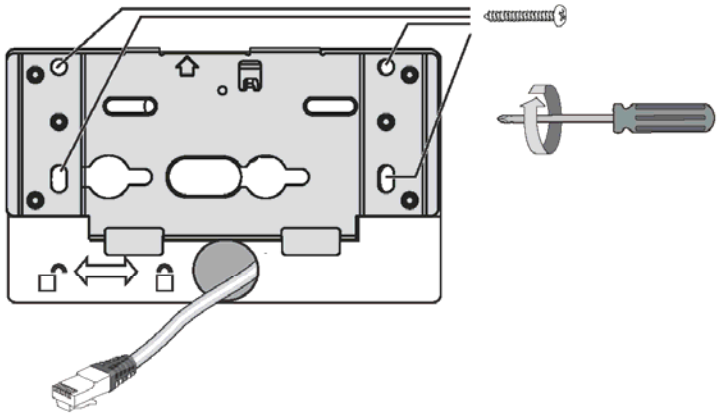

A5 A5. Connect the Ethernet cable to the camera.

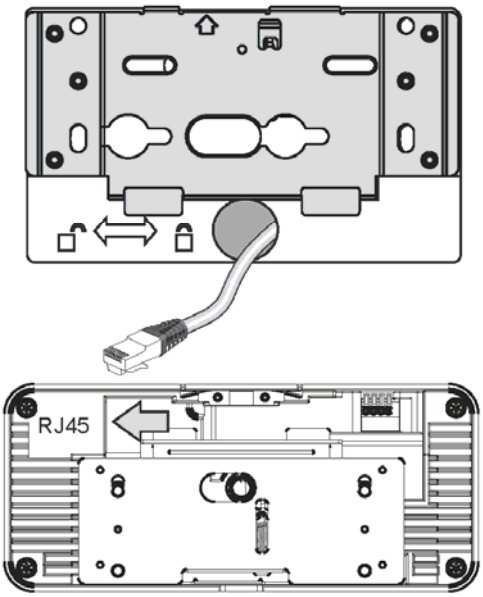

A6 A6. Align the camera with the bracket, and slide the camera to the right. The camera will then be securely mounted to the bracket. Note that the side with two LEDs is the top side, and should be aligned with the arrow mark on the mounting plate.

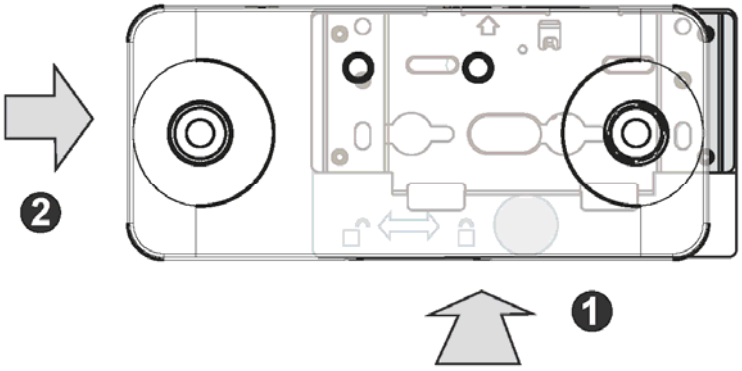
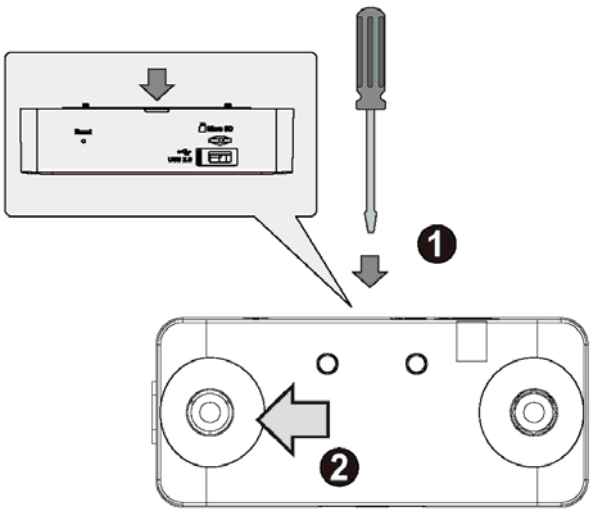
To remove a camera, use a flat blade screwdriver. Press it down against the release tab from the top side and slide the camera to the left.